OPTIMIZATION-BASED CONTROL SYSTEM DESIGN FOR INFINITE DIMENSIONAL SYSTEMS

by

Ywh-Pyng Harn

Memorandum No. UCB/ERL M89/131

13 December 1989

OPTIMIZATION-BASED CONTROL SYSTEM DESIGN FOR INFINITE DIMENSIONAL SYSTEMS

by

Ywh-Pyng Harn

Memorandum No. UCB/ERL M89/131

13 December 1989

ELECTRONICS RESEARCH LABORATORY

College of Engineering
University of California, Berkeley
94720

TITLE PAGE

OPTIMIZATION-BASED CONTROL SYSTEM DESIGN FOR INFINITE DIMENSIONAL SYSTEMS

by

Ywh-Pyng Harn

Memorandum No. UCB/ERL M89/131

13 December 1989

OPTIMIZATION-BASED CONTROL SYSTEM DESIGN FOR INFINITE DIMENSIONAL SYSTEMS

by

Ywh-Pyng Harn

Memorandum No. UCB/ERL M89/131

13 December 1989

ELECTRONICS RESEARCH LABORATORY

College of Engineering
University of California, Berkeley
94720

OPTIMIZATION-BASED CONTROL SYSTEM DESIGN FOR INFINITE DIMENSIONAL SYSTEMS

Ywh-Pyng Harn

Ph.D.

Dept. of Electrical Engineering
and Computer Sciences

Signature: _____
Committee Chairman

ABSTRACT

We considered several problems which arise in the design of finite dimensional compensators for feedback systems with infinite dimensional plants, described by a functional differential equation in a reflexive Banach space and exhibiting only a finite number of unstable modes. Our work was motivated by the design of controlled flexible structures.

First we considered feedback-system stabilization. We defined a characteristic function for a unity-gain feedback system with infinite dimensional plant and related its zeros to the exponential stability of the closed-loop system. For exponentially stable plants, this relationship enabled us to exhibit the existence of simple, proportional-plus-multi-integral compensators that result in exponentially stable feedback-systems which track polynomial input signals and suppress polynomial output disturbances, asymptotically. In addition, it has led to an extension of a powerful stability criterion, in semi-infinite inequality form, which makes possible the design of finite dimensional stabilizing compensators for feedback systems, using the full infinite-dimensional plant model.

Next we turned to semi-infinite-optimization-based design of compensators for feedback systems with infinite dimensional plant, subject to design requirements, such as stability margin, disturbance rejection, robustness to plant variations, and specified time-domain responses. We showed that these requirements can be transcribed into semi-infinite inequalities involving matrix norms of various transfer functions, with compensators specified either in parametrized state-space form or by means of a finite dimensional matrix parameter Q in a factored characterization of all stabilizing compensators. The state-space form has the advantage of allowing preselection of compensator order, but requires the use of our stability criterion and results in a

nonconvex optimization problem. On the other hand, Q-parametrization leads automatically to an elegant convex optimization problem, whose solution, unfortunately, is an infinite dimensional stabilizing compensator which must be approximated. As the dimension of the parameter Q is increased, the resulting compensators converge to an optimal H^∞ solution of the design problem.

We illustrated our design methodology by numerical examples in which we considered the control system design for the bending motion of a flexible cantilever beam with boundary point force/moment actuators and point displacement/angle-of-rotation sensors.

ACKNOWLEDGEMENTS

I would like to express my deepest gratitude to Professor Elijah Polak for his valuable advice and support during the period of my research work. This thesis would have been impossible to finish without his enthusiasm and patience.

I am very grateful to Professor Charles Desoer and Professor Jerome Sackman for serving on my dissertation committee. I also thank them for many helpful discussions.

I give my sincere gratitude to the following professors with whom I could feel free to discuss questions: Professor Tosio Kato, Professor Heinz Cordes, Professor Beresford Parlett, Professor Paul Chernoff, and Professor Donald Sarason.

My colleagues and friends provided a lot of helpful discussions and encouragements. Of them, I especially acknowledge the following persons: Stephen Wuu, Loc Vu-Quoc, Septimiu Salcudean, Ted Baker, Joe Higgins, Thomas Yang, Ren-Song Tsay, Liaw Huang, Nazli Gundes, Joseph Wiest, Limin He, Salvador Garcia, and Joseph Kan. Special thanks are given to Jane Wang for her support and consideration.

I am very grateful to my family for their everlasting moral support and understanding. They always gave me courage and confidence whenever I felt depressed during the course of research.

The research was sponsored in part by the National Science Foundation under grant ECS-8121149, the Air Force Office of Scientific Research under grant AFOSR-83-0361, the Office of Naval Research under grant N00014-83-K-0602, the State of California MICRO Program and the General Electric Company. I would like to thank these organizations for their support.

NOTATION

$\mathbb{C}$	Complex numbers (plane).
$\mathbb{C}_-$	$\{s \in \mathbb{C} \mid \mathrm{Re}(s) < 0\}$.
$\mathbb{C}_+$	$\{s \in \mathbb{C} \mid \mathrm{Re}(s) \geq 0\} = \mathbb{C} - \mathbb{C}_-$.
$\mathbb{C}_+^o$	$\{s \in \mathbb{C} \mid \mathrm{Re}(s) > 0\}$.
$\partial\, \mathbb{C}_+$	$\{s \in \mathbb{C} \mid \mathrm{Re}(s) = 0\}$.
$D_{-\alpha}$	$\{s \in \mathbb{C} \mid \mathrm{Re}(s) < -\alpha\}$, the stability region.
$D(T)$	Domain of the operator T.
$E(F)$	The set of matrices whose elements belong to the set F.
$G_c(s)$	Transfer matrix of the compensator, $\triangleq C_c(sI - A_c)^{-1}B_c + D_c$.
$G_p(s)$	Transfer matrix of the plant, $\triangleq C_p(sI - A_p)^{-1}B_p + D_p$, $\forall\ s \in \rho(A_p)$.
$H_{-\alpha}$	The Hardy space of complex functions that are bounded and analytic in $U_{-\alpha}^o$, continuous on $\partial U_{-\alpha}$ and equipped with the norm defined as follows $$\|f\|_\infty = \sup_{s \in \partial U_{-\alpha}} |f(s)|, \quad f \in H_{-\alpha}.$$
H_0	The Hardy space $H_{-\alpha}$ with $\alpha = 0$.
$\mathbb{N}$	Natural numbers = $\{1, 2, 3, \ldots\}$.
$\mathbb{R}$	Real numbers.

$R(T)$	Range of the operator T.
$R(s)$	The set of proper rational functions.
$R_{-\alpha}(s)$	The set of proper rational functions which are analytical in $U_{-\alpha}$.
$U_{-\alpha}$	$\{s \in \mathbb{C} \mid \mathrm{Re}(s) \geq -\alpha\} = \mathbb{C} - D_{-\alpha}$.
$\partial U_{-\alpha}$	$\{s \in \mathbb{C} \mid \mathrm{Re}(s) = -\alpha\}$.
$U^o_{-\alpha}$	$\{s \in \mathbb{C} \mid \mathrm{Re}(s) > -\alpha\} = U_{-\alpha} - \partial U_{-\alpha}$.
$V-U$	The set of $\{s \in V \text{ and } s \notin U\}$.
$W_{-\alpha}(s)$	The set of complex functions which are analytical in $U^o_{-\alpha}$, continuous on $\partial U_{-\alpha}$, and converge at infinity in $U_{-\alpha}$.
$W^{m \times n}$	The set of $m \times n$ matrices whose elements belong to the set W.
$Z(f)$	$\{s \in \mathbb{C} \mid f(s) = 0\}$, the set of zeros of f.
$\alpha > 0$	Stability Margin.
$\sigma(T)$	Spectrum of the operator T.
$\bar{\sigma}(M)$	Largest singular value of the matrix M.
$\rho(T)$	Resolvent set of the operator T, $= \mathbb{C} - \sigma(T)$.

Table of Contents

CHAPTER 1

INTRODUCTION

Controlled flexible structures are found both in space and in terrestrial applications. In space, they arise in the complex form of satellites, and space stations, on earth they tend to be simpler, as in the form of flexible arms of a robot, or mechanical manipulator. Their study has motivated our research on the design of finite dimensional compensators for infinite dimensional feedback systems described by functional differential equations, in a semi-infinite optimization setting.

The earliest attempts to design a finite dimensional compensator for an infinite dimensional system consisted of approximating the infinite dimensional system by a finite dimensional system, and then applying well-developed finite dimensional system design methodologies. A variety of approximation schemes have been used, for example, the Rayleigh-Ritz method [Jun.1], modal approximation [Gib.1, Mei.1], and finite-element methods [Mov.1]. The work in [Gib.1, Gib.2, Gib.3, Ban.1], which deals with linear quadratic regulators (LQR), validates some discretization schemes by showing that, under some conditions, the sequence of optimal compensators for the finite dimensional systems converges to the optimal compensator for the infinite dimensional system.

In later work, basic LQR methods were generalized to deal with the design of compensators for distributed plants. This generalization resulted in functional Riccati equations from which infinite dimensional compensators can be derived [Cur.2, Zab.1]. The approach of Q–parametrization has also been generalized to design compensators for infinite dimensional feedback systems [Cal.1, Des.1, Des.2, Net.1, Vid.1]. In both cases, various approximation

methods have been applied to get a finite dimensional compensator [Bal.2, Pri.1, Ito.1, Bis.1, Vid.1, Cur.3]. In another alternative approach, the state-space formulation and the concept of invariant subspace have been used to obtain finite dimensional stabilizing compensators [Cur.1, Sch.1].

All of the above approaches share a common feature: approximation techniques are first used during the design process to get a finite dimensional compensator, and then robustness theory is applied to show that the resulting finite dimensional compensator stabilizes the infinite dimensional plant. Since the relationship between the particular approximation technique and the order of the compensator is not known, the order cannot, in general, be selected in advance.

In this thesis, we consider optimal feedback system design for a class of linear time-invariant infinite dimensional systems. We propose a design methodology that does not require truncation of the infinite dimensional system to a finite dimensional one. Consequently, we avoid the nontrivial stability robustness problem.

Feedback control is used to satisfy various design specifications, such as stability, disturbance attenuation, and low sensitivity to changes in the plant. In this thesis, we transform various design specifications into a constrained H^∞ semi-infinite optimization problem. The solution of this problem is made possible by the recent development of algorithms for the constrained minimization of regular, uniformly locally Lipschitz continuous functions in $\mathbb{R}^N$ [Pol.3]. This approach has been used to solve problems in finite dimensional control system design [Gus.1, Boy.1, Pol.5, Pol.6, Wuu.1]. Our method is new and has not appeared in the literature before.

In Chapter 2, we define the class of infinite dimensional plants considered in this thesis. We model the plants by a functional differential equation in a reflexive Banach space and

assume that the plant has a finite number of unstable modes. We illustrate our design methodology by means of a specific plant. For this purpose, we consider the bending motion of a cantilever beam with boundary point force/moment actuators and point displacement/angle-of-rotation sensors. We show that this plant is a member of the class of infinite dimensional systems mentioned above. We present some preliminary results concerning unity-gain feedback systems. Next, we define a characteristic function for the feedback system and relate the exponential stability (with a stability margin) to the zeros of this characteristic function.

In Chapter 3, we consider exponentially stable infinite dimensional systems. We design a simple low-order proportional-plus-multi-integral compensator. This resulting closed-loop system is exponentially stable, asymptotically tracks polynomial inputs, and asymptotically suppresses polynomial disturbances.

In Chapter 4, we consider a more complicated system design which allows the requirement of a certain stability margin and includes additional design specifications such as robustness, disturbance depression, saturation avoidance, shaped output response specifications, etc. We transform the problem of designing optimal compensators for the infinite dimensional plants, introduced in Chapter 2, into a semi-infinite optimization problem. First, we present a computational stability criterion which gives us a necessary and sufficient condition for testing exponential stability of the feedback system that is appropriate in a semi-infinite optimization setting. We then consider the formulation of other frequency- and time-domain design specifications. We also discuss the numerical implementations in the design process with an emphasis on the evaluation of the plant frequency response. We model the compensator in a parametrized state-space form. The main advantages of using the parametrized state-space form for the compensator are: (1) the order of the compensator can be preselected; (2) it is easy to generalize the design methodology presented in this chapter to a collection of intercon-

nected feedback systems; and (3) it is suitable for integrated system design in which some plant parameters are design variables. A drawback of this approach is that it leads to optimization problems that may have local minima.

In Chapter 5, we present an alternative design methodology to that proposed in Chapter 4. In this approach, we parametrize compensators by means of Q-parametrization and transform the design problem into a *convex* semi-infinite optimization problem. We construct a sequence of finite dimensional compensators that converge to the optimal solution. Because the resulting semi-infinite optimization problem is a convex one, this approach guarantees that we can find the global solution.

Finally, in Chapter 6, we draw some conclusions and give some suggestions regarding future research.

CHAPTER 2

MODELING OF INFINITE DIMENSIONAL FEEDBACK SYSTEMS AND PRELIMINARY RESULTS

2.1 Introduction

In this chapter, we develop a model for infinite dimensional feedback systems and give some preliminary results. These preliminary results are relevant to the control system design that will be discussed subsequently. In Section 2.2, we introduce the class of infinite dimensional plants for which we will design feedback systems. We formulate the plant in a functional differential form so that semigroup theory can be applied. The plant we consider has a finite number of unstable modes, for which we can construct a finite dimensional stabilizing compensator. Throughout this thesis, we illustrate our design methodologies by considering control system design for the bending motion of a flexible cantilever beam with boundary point force/moment actuators and point displacement/angle-of-rotation sensors. Therefore, in Section 2.3, we pay particular attention to the bending motion of a flexible cantilever with boundary point force/moment actuators and point displacement/angle-of-rotation sensors and show that it is a member of the class of infinite dimensional systems introduced in Section 2.2. In Section 2.4, we formulate the compensator in finite dimensional state-space form. Stability (with a certain stability margin) is defined in the *internal* sense, instead of the *input-output* sense: that is, stability is defined in terms of the semigroup of the closed-loop system instead of transfer functions. We then define the characteristic function of the feedback system, and present a relationship between the zeros of the characteristic function and the stability of the closed-loop system in Theorem 2.4.1. The relationship is used quite often in the subsequent chapters to test the stability of the feedback systems. A similar result holds in the finite dimensional case

[Des.3]. Based on Theorem 2.4.1, a computational stability test, compatible with the use of semi-infinite optimization, is constructed in Chapter 4.

For the terminology in functional analysis and semigroup theory, we refer the reader to standard books such as [Kat.1, Paz.1, Bal.1]. Notations used frequently in this thesis are defined on pages iv and v.

2.2 Modeling of the Plant

Consider the feedback system $S(P, K)$ shown in Figure 2.1. We assume that the plant, with n_i inputs and n_o outputs, is described by a linear and time-invariant differential equation in a reflexive Banach space Z:

$$\begin{aligned} \dot{x}_p(t) &= A_p x_p(t) + B_p e_2(t), \\ y_2(t) &= C_p x_p(t) + D_p e_2(t), \end{aligned} \tag{2.2.1}$$

where $x_p(t) \in Z$, $e_2(t) \in \mathbb{R}^{n_i}$, $y_2(t) \in \mathbb{R}^{n_o}$, for $t \geq 0$ and $D_p : \mathbb{R}^{n_i} \to \mathbb{R}^{n_o}$.

Assumption 2.2.1: The operator $A_p : D(A_p) \to Z$, with $D(A_p)$ dense in Z, generates a strongly continuous (C_0) bounded semigroup, $\{e^{A_p t}\}_{t \geq 0}$. ■

Assumption 2.2.2: The operators $B_p : \mathbb{R}^{n_i} \to Z$, $C_p : Z \to \mathbb{R}^{n_o}$ and $D_p : \mathbb{R}^{n_i} \to \mathbb{R}^{n_o}$ are assumed to be bounded. ■

Hille-Yosida Theorem [Paz.1]: For each strongly continuous semigroup, A_p, there exist $M \geq 1$ and $\gamma \in \mathbb{R}$ such that

$$\|e^{A_p t}\| \leq M e^{\gamma t}, \ \forall \ t \geq 0. \tag{2.2.2}$$

■

If γ is the constant of the previous theorem, the following result says that the resolvent set of the operator A_p contains the open right half plane $U_\gamma^o \triangleq \{s \in \mathbb{C} \mid \operatorname{Re} s > \gamma\}$.

Proposition 2.2.1 [Paz.1, Theorem 1.5.3]: $U_\gamma^o \subset \rho(A_p)$.

■

Definition 2.2.1: For all $s \in \rho(A_p)$, we define the *transfer function* of the plant, $G_p(s)$, to be

$$G_p(s) \triangleq C_p(sI - A_p)^{-1}B_p + D_p. \tag{2.2.3}$$

where $I: Z \to Z$ is the bounded identity operator, i.e., $Iz = z, \forall\ z \in Z$. ■

Referring to [Kat.1, Theorem III 6.7], we have the following result.

Proposition 2.2.2: $G_p(s)$ is analytic on $\rho(A_p)$. ■

Definition 2.2.2: We will say that a function, $g: \mathbb{C} \to \mathbb{C}$, *converges at infinity* in a domain $D \subset \mathbb{C}$, if there exists a finite complex number, c, such that $\lim_{\rho \to \infty} \sup_{\substack{|s| \geq \rho \\ s \in D}} |g(s) - c| = 0$, and we will write $c = \lim_{\substack{|s| \to \infty \\ s \in D}} g(s)$. We will say that a matrix function $G: \mathbb{C} \to \mathbb{C}^{m \times n}$ converges at infinity in a domain D if each of its elements converges at infinity in D. ■

Since $\{C_p(sI - A_p)^{-1}B_p\}$ tends to zero as $|s| \to \infty$ in U_γ^o [Doe.1, Theorem 23.7], where γ is the constant shown in (2.2.2), we have

Proposition 2.2.3 [Jac.1]:

$$\lim_{\substack{|s| \to \infty \\ \mathrm{Re}\, s > \gamma}} G_p(s) \to D_p\ . \tag{2.2.4}$$

■

Definition 2.2.3: For any $\alpha \geq 0$, a semi-group $\{T(t)\}_{t \geq 0}$, defined on a Banach space, is said to be α*–stable* if there exist $M \in (0, \infty)$ and $\alpha_0 > \alpha$ such that

$$\|T(t)\| \leq Me^{-\alpha_0 t}\ , \quad \forall\ t \geq 0\ . \tag{2.2.5}$$

■

We assume that the plant model (2.2.1) satisfies the following *spectrum decomposition assumption.*

Assumption 2.2.3: There exists a decomposition of $Z = Z_- \oplus Z_+$, with Z_+ finite-dimensional, which induces a decomposition of the plant (2.2.1), of the form

$$\begin{aligned} \frac{d}{dt}\begin{bmatrix} x_{p-}(t) \\ x_{p+}(t) \end{bmatrix} &= \begin{bmatrix} A_{p-} & 0 \\ 0 & A_{p+} \end{bmatrix}\begin{bmatrix} x_{p-}(t) \\ x_{p+}(t) \end{bmatrix} + \begin{bmatrix} B_{p-} \\ B_{p+} \end{bmatrix} e_2(t) , \\ y_2(t) &= [C_{p-} \;\; C_{p+}]\begin{bmatrix} x_{p-}(t) \\ x_{p+}(t) \end{bmatrix} + D_p e_2(t), \end{aligned} \tag{2.2.6}$$

such that $\sigma(A_{p+}) \subset U_{-\alpha}$, (A_{p+}, B_{p+}) is controllable, (A_{p+}, C_{p+}) is observable, and A_{p-} is the infinitesimal generator of an α–stable C_0–semigroup on Z_-. ■

Remark 2.2.1: As in the finite dimensional case, we say that the plant in (2.2.1) is *α–stabilizable* and *α–detectable* if there exist bounded linear operators $K: Z \to \mathbb{R}^{n_i}$ and $F: \mathbb{R}^{n_o} \to Z$ such that $A_p - B_pK$ and $A_p - FC_p$ are the infinitesimal generators of α–stable C_0–semigroups. It can be shown that the plant is α-stabilizable and α-detectable if and only if it has the decomposition of the form (2.2.6) [Nef.1, Jac.1]. In [Nef.1, Jac.1] only 0-stability is considered. The extension to α–stability is trivial. ■

Under the assumptions 2.2.1-3, the following result guarantees that there exists a finite dimensional stabilizing compensator for the feedback system $S(P, K)$ shown in Figure 2.1.

Proposition 2.2.4 [Jac.1]: A plant of the form (2.2.1) has a decomposition of the form (2.2.6) if and only if there exists a finite dimensional strictly proper compensator such that the feedback system is α–stable. ■

Remark 2.2.2: Although the state space of the plant is assumed to be a Hilbert space in [Jac.1], the results from [Jac.1] used in this section remain true if we assume that the state space of the plant is a reflexive Banach space. ■

2.3 An Example: Bending Motion of A Cantilever Beam

In this section, we show that the bending motion of a flexible cantilever beam with boundary point force/moment actuators and point displacement/angle-of-rotation sensors can be modeled by equations of the form (2.2.1). We use this infinite dimensional plant model in the numerical design examples in the subsequent chapters to illustrate our proposed design procedure.

Consider the planar bending motion of a cantilever flexible beam, shown in Figure 2.2, with a particle of mass M attached to the free end. The x-axis is the undeformed beam centroidal line; the y-axis is the cross-section principal axis. The associated control system is required to damp out vibrations. We assume that the beam has unit length and has point force/moment actuators and point displacement/angle-of-rotation sensors at the boundary. Its bending motion can be described by the following partial differential equation [Clo.1]:

$$m\frac{\partial^2 w(t,x)}{\partial t^2} + cI\frac{\partial^5 w(t,x)}{\partial x^4 \partial t} + EI\frac{\partial^4 w(t,x)}{\partial x^4} = 0, \quad t \geq 0, \quad 0 \leq x \leq 1 \ , \tag{2.3.1a}$$

with boundary conditions

$$w(t,0) = 0 \ , \ \frac{\partial w}{\partial x}(t,0) = 0, \tag{2.3.1b}$$

$$M\frac{\partial^2 w}{\partial t^2}(t,1) - cI\frac{\partial^4 w}{\partial x^3 \partial t}(t,1) - EI\frac{\partial^3 w}{\partial x^3}(t,1) = f_1(t), \tag{2.3.1c}$$

$$J\frac{\partial^3 w}{\partial x \partial t^2}(t,1) + cI\frac{\partial^3 w}{\partial x^2 \partial t}(t,1) + EI\frac{\partial^2 w}{\partial x^2}(t,1) = f_2(t), \tag{2.3.1d}$$

where $w(t, x)$ is the vibration along the y-axis, $f_1(t)$ is a control force, $f_2(t)$ is a control moment, m is the distributed mass per unit length of the beam, c is the material viscous damping coefficient, E is Young's modulus, M is the end mass, I is the beam sectional second moment of area with respect to the y-axis, and J is the rotational inertia of the end mass. The output sensors are modeled by

$$y_1(t) = w(t, 1), \quad t \geq 0 \ , \tag{2.3.2a}$$

or

$$y_2(t) = \frac{\partial w}{\partial x}(t, 1), \quad t \geq 0 \ . \tag{2.3.2b}$$

We now proceed to show that the system (2.3.1a-d), (2.3.2a-b) can be transcribed into the first order form (2.2.1), with the assumptions stated. For simplicity and without loss of generality, we assume that there is only one force or moment actuator and one displacement or angle-of-rotation sensor. First we rewrite (2.3.1a-d), (2.3.2a-b) in the form of

$$\ddot{\overline{w}}(t,\cdot) + D_0\dot{\overline{w}}(t,\cdot) + A_0\overline{w}(t,\cdot) = B_0 f(t), \ t \geq 0, \ 0 \leq x \leq 1, \tag{2.3.3a}$$

$$y(t) = C_0\overline{w}(t,\cdot), \tag{2.3.3b}$$

where "$\cdot$" denotes the derivative with respect to time, in the following definitions, we assume that t is fixed and omit it for notational simplicity,

$$\overline{w}(\cdot) = (w(\cdot), w_1, w_2)^T \in D(A_0) = D(D_0) = \left\{ w(\cdot) \in H^4([0, 1]), w(0) = w'(0) = 0, w_1 = w(1), w_2 = w'(1) \right\}$$
$$\subset V_0 \triangleq L^2([0,1]) \times \mathbb{R}^2, \tag{2.3.3c}$$

$$D_0\overline{w} \triangleq \left(\frac{cI}{m}\frac{d^4w(x)}{dx^4}, \ \frac{-cI}{M}\frac{d^3w}{dx^3}(1), \ \frac{cI}{J}\frac{d^2w}{dx^2}(1)\right)^T , \tag{2.3.3d}$$

$$A_0\overline{w} \triangleq \left(\frac{EI}{m}\frac{d^4w(x)}{dx^4}, \ \frac{-EI}{M}\frac{d^3w}{dx^3}(1), \ \frac{EI}{J}\frac{d^2w}{dx^2}(1)\right)^T , \tag{2.3.3e}$$

$$B_0 \triangleq (0, \frac{1}{M}, 0)^T, \text{ or } (0, 0, \frac{1}{J})^T, \tag{2.3.3f}$$

$$C_0\overline{w} \triangleq w(1) \ , \text{ or } w'(1), \tag{2.3.3g}$$

$H^4([0,1])$ denotes the set of functions whose fourth derivative belongs to $L^2([0,1])$ and w' denotes the derivative of w with respect to the spatial variable x. Note that

$$D_0(\cdot) = \frac{c}{E} A_0(\cdot) \tag{2.3.3h}$$

in the above example.

Let $\overline{u} = (u(\cdot), u_1, u_2)^T$ and $\overline{v} = (v(\cdot), v_1, v_2)^T$ belong to V_0 in (2.3.3c). We define a inner product in V_0 as follows:

$$\langle \overline{u}, \overline{v} \rangle_{V_0} = \langle u, v \rangle_{L^2([0,1])} + \frac{M}{m} u_1 v_1 + \frac{J}{m} u_2 v_2 \,. \tag{2.3.4}$$

We have the following nice property for the operator A_0.

Proposition 2.3.1: The linear stiffness operator A_0 is a positive definite and self-adjoint operator from $D(A_0)$, which is dense in V_0, onto V_0, with compact inverse. In fact, A_0 is coercive, i.e., there exists $\rho > 0$ such that

$$\langle A_0 \overline{v}, \overline{v} \rangle_{V_0} \geq \rho^2 \|\overline{v}\|^2_{V_0} \,, \quad \forall\, \overline{v} \in D(A_0) \,. \tag{2.3.5}$$

Proof: The following proof is similar to that given in [Sch.2].

We first prove that $D(A_0)$ is dense in V_0. Let $\overline{v} = (v(\cdot), v_1, v_2)^T \in V_0$. Define

$$z_n(x) = \begin{cases} 0, & x \in [0, 1/n] \\ v(x), & x \in [1/n, 1-1/n] \\ v_1 + v_2 \cdot (x-1), & x \in [1-1/n, 1+1/n] \end{cases} \tag{2.3.6}$$

Let $\phi_\varepsilon(\cdot)$ be a positive function in C^∞, the space of infinitely differentiable real-valued functions on $(-\infty, \infty)$, such that

$$\begin{aligned} &\phi_\varepsilon(-x) = \phi_\varepsilon(x) \,, \\ &\int_{-\infty}^{\infty} \phi_\varepsilon(x) dx = 1 \,, \\ &\phi_\varepsilon(x) = 0 \quad \text{for } x \notin (-\varepsilon, \varepsilon) \,. \end{aligned} \tag{2.3.7}$$

We define

$$u_n(x) \triangleq \int_{-\infty}^{\infty} z_n(x-y)\phi_{\frac{1}{4n}}(y)dy = \int_{-\infty}^{\infty} z_n(y)\phi_{\frac{1}{4n}}(x-y)dy\ , \qquad 0 \le x \le 1\ . \tag{2.3.8}$$

Then it is straightforward to check that $u_n(\cdot) \in C^\infty([0,1])$, $u_n(0) = u_n'(0) = 0$, $u_n(1) = v_1$, $u_n'(1) = v_2$ and u_n converges to v in $L^2([0,1])$. Therefore $(u_n(\cdot), v_1, v_2)^T \in D(A_0)$ and it converges to $\overline{v}$ in V_0.

Now we prove that A_0 is invertible. For any $\overline{v} = (v(\cdot), v_1, v_2)^T \in V_0$, we define

$$\begin{aligned} u(x) &= \frac{m}{EI}\int_0^x d\varepsilon_1 \int_0^{\varepsilon_1} d\varepsilon_2 \left\{\int_1^{\varepsilon_2} d\varepsilon_3 \left[\int_1^{\varepsilon_3} v(\varepsilon_4)d\varepsilon_4 - \frac{M}{m}v_1\right] + \frac{J}{m}v_2\right\} \\ &= \frac{m}{EI}\int_0^x d\varepsilon_1 \int_0^{\varepsilon_1} d\varepsilon_2 \int_1^{\varepsilon_2} d\varepsilon_3 \int_1^{\varepsilon_3} v(\varepsilon_4)d\varepsilon_4 - \frac{M}{EI}\frac{v_1}{6}x^2(x-3) + \frac{J}{EI}\frac{v_2}{2}x^2. \end{aligned} \tag{2.3.9}$$

Then $\overline{u} \triangleq (u(\cdot), u(1), u'(1))^T \in D(A_0)$ and $A_0\overline{u} = \overline{v}$. Since A_0^{-1} is an integral operator, it is compact and therefore bounded.

Next we prove that A_0 is self-adjoint. Consider $\overline{u} = (u(\cdot), u(1), u'(1))^T$ and $\overline{v} = (v(\cdot), v(1), v'(1))^T \in D(A_0)$. Then

$$\begin{aligned} \langle \overline{u}, A_0\overline{v}\rangle_{V_0} &= \langle (u, u(1), u'(1))^T, (\frac{EI}{m}v^{(iv)}(x), -\frac{EI}{M}v'''(1), \frac{EI}{J}v''(1))^T\rangle_{V_0} \\ &= \frac{EI}{m}\int_0^1 u(\tau)v^{(iv)}(\tau)d\tau - \frac{EI}{m}u(1)v'''(1) + \frac{EI}{m}u'(1)v''(1)\ . \end{aligned} \tag{2.3.10}$$

Integrating by parts, we obtain

$$\langle \overline{u}, A_0\overline{v}\rangle_{V_0} = \frac{EI}{m}\int_0^1 u''(\tau)v''(\tau)d\tau = \frac{EI}{m}\langle u''(\cdot), v''(\cdot)\rangle_{L^2([0,1])}\ . \tag{2.3.11a}$$

Similarly, we have that

$$\langle A_0\overline{u}, \overline{v}\rangle_{V_0} = \frac{EI}{m}\langle u''(\cdot), v''(\cdot)\rangle_{L^2([0,1])} = \langle \overline{u}, A_0\overline{v}\rangle_{V_0}\ . \tag{2.3.11b}$$

Hence for any $\overline{v} \in D(A_0)$, we have $\overline{v} \in D(A_0^*)$ and $A_0^*\overline{v} = A_0\overline{v}$. Therefore $D(A_0) \subset D(A_0^*)$. To prove that $A_0 = A_0^*$, we have to show that $D(A_0^*) \subset D(A_0)$. Suppose $\overline{y} \in D(A_0^*)$ and $A_0^*\overline{y} = \overline{z}$. From the definition of A_0^*, we have

$$\langle \bar{y}, A_0\bar{u} \rangle_{V_0} = \langle \bar{z}, \bar{u} \rangle_{V_0}, \quad \forall\ \bar{u} \in D(A_0)\ . \tag{2.3.12}$$

Since $\bar{z} \in V_0$ and $R(A_0) = V_0$, there exists $\bar{v} \in D(A_0)$ such that $A_0\bar{v} = \bar{z}$. Hence from (2.3.12), we get

$$\langle \bar{y}, A_0\bar{u} \rangle_{V_0} = \langle \bar{z}, \bar{u} \rangle_{V_0} = \langle A_0\bar{v}, \bar{u} \rangle_{V_0} = \langle \bar{v}, A_0\bar{u} \rangle_{V_0}\ , \quad \forall\ \bar{u} \in D(A_0)\ . \tag{2.3.13}$$

The last equation comes from (2.3.11b). Therefore $\bar{y} = \bar{v} \in D(A_0)$ because $R(A_0) = V_0$. So we have shown that A_0 is self-adjoint (and therefore closed).

Next, we prove that A_0 is coercive. Consider $\bar{v} = (v(\cdot), v(1), v'(1))^T \in D(A_0)$. In (2.3.11a), we show that

$$\langle \bar{v}, A_0\bar{v} \rangle_{V_0} = \frac{EI}{m} \|v''\|^2_{L^2([0,1])}\ . \tag{2.3.14}$$

Since $v(x) = \int_0^x v'(\tau)d\tau$, it follows from the Schwartz Inequality that

$$|v(x)| \le \int_0^x |v'(\tau)|\, d\tau \le \int_0^1 |v'(\tau)|\, d\tau \le \left(\int_0^1 |v'(\tau)|^2 d\tau\right)^{1/2} = \|v'\|_{L^2([0,1])}\ , \tag{2.3.15a}$$

which implies that

$$\|v\|_{L^2([0,1])} = \left(\int_0^1 |v(x)|^2 dx\right)^{1/2} \le \|v'\|_{L^2([0,1])}\ . \tag{2.3.15b}$$

Similarly,

$$|v'(x)| \le \|v''\|_{L^2([0,1])} \tag{2.3.16a}$$

and

$$\|v'\|_{L^2([0,1])} \le \|v''\|_{L^2([0,1])}\ . \tag{2.3.16b}$$

Note that

$$\|\bar{v}\|^2_{V_0} = \|v\|^2_{L^2([0,1])} + \frac{M}{m} v(1)^2 + \frac{J}{m} v'(1)^2\ . \tag{2.3.17}$$

As a consequence of (2.3.15a), (2.3.16a-b), we have that

$$\frac{M}{m}v(1)^2 \le \frac{M}{m}\|v''\|^2_{L^2([0,1])}, \tag{2.3.18a}$$

$$\frac{J}{m}v'(1)^2 \le \frac{J}{m}\|v''\|^2_{L^2([0,1])}, \tag{2.3.18b}$$

and

$$\begin{aligned}\|\overline{v}\|^2_{V_0} &\le (1 + \frac{M}{m} + \frac{J}{m})\|v''\|^2_{L^2([0,1])} \\ &= (1 + \frac{M}{m} + \frac{J}{m})\frac{m}{EI}\langle \overline{v}, A_0\overline{v}\rangle_{V_0} = (\frac{m}{EI} + \frac{M}{EI} + \frac{J}{EI})\langle \overline{v}, A_0\overline{v}\rangle_{V_0}.\end{aligned} \tag{2.3.18c}$$

and the proof is completed. ■

Referring to [Kat.1, p. 187], we obtain the following result which characterizes the spectrum of A_0:

Lemma 2.3.1: The spectrum of A_0 is an infinitely increasing sequence of positive real eigenvalues $\{\omega_n^2\}_{n\in\mathbb{N}}$, each of finite multiplicity, and the corresponding mutually orthogonal eigenvectors $\{\eta_n\}_{n\in\mathbb{N}}$ comprise a complete basis in V_0. ■

The ω_n's and η_n's are, respectively, the natural frequencies and mode shapes of free, undamped oscillations.

Since A_0 has the nice properties described in Proposition 2.3.1, its square root, $A_0^{1/2}$, is well defined [Rud.2]. In fact, $V \triangleq D(A_0^{1/2})$ is a Hilbert space with the inner product

$$\langle \overline{v}_1, \overline{v}_2\rangle_V \triangleq \langle A_0^{1/2}\overline{v}_1, A_0^{1/2}\overline{v}_2\rangle_{V_0}, \quad \overline{v}_1, \overline{v}_2 \in V. \tag{2.3.19}$$

We define the *energy space* $\Sigma = V \times V_0$ with the inner product

$$\langle (\overline{v}_1, \overline{h}_1)^T, (\overline{v}_2, \overline{h}_2)^T\rangle_\Sigma \triangleq \langle \overline{v}_1, \overline{v}_2\rangle_V + \langle \overline{h}_1, \overline{h}_2\rangle_{V_0}, \quad \overline{v}_1, \overline{v}_2 \in V, \overline{h}_1, \overline{h}_2 \in V_0. \tag{2.3.20}$$

Remark 2.3.1: (i) The eigenvectors of A_0 are also mutually orthogonal and complete in V, and the pairs $(\eta_n, 0)^T$ and $(0, \eta_n)^T$ are thus mutually orthogonal and complete in Σ [Gib.1].

(ii) In fact, $V = D(A_0^{1/2})$ is the closure of $D(A_0)$ with respect to the norm defined by (2.3.14). For the above example of the flexible beam, it can be easily seen from (2.3.14), (2.3.15a), and (2.3.16a-b) that [Sch.2]

$$V = \{\bar{v} = (v(\cdot), v_1, v_2)^T \mid v \in H^2([0,1]), v(0) = v'(0) = 0, v_1 = v(1), v_2 = v'(1)\}, \quad (2.3.21a)$$

$$\|\bar{v}\|_V = \sqrt{\frac{EI}{m}}\|v''\|_{L^2([0,1])}, \quad (2.3.21b)$$

where $H^2([0, 1])$ denotes the set of functions whose 2nd derivative belongs to $L^2([0, 1])$.

■

Let $x_p(t) = (w(t,\cdot), \dot{w}(t,\cdot))^T \in D(A_0)\times D(A_0) \subset \Sigma$. Then (2.3.3a-b) can be rewritten in the following first order form:

$$\begin{aligned} \dot{x}_p(t) &= A_p x_p(t) + B_p f(t) \\ &\triangleq \begin{bmatrix} 0 & 1 \\ -A_0 & -D_0 \end{bmatrix} x_p(t) + \begin{bmatrix} 0 \\ B_0 \end{bmatrix} f(t) \end{aligned} \quad (2.3.22a)$$

$$\begin{aligned} y(t) &= C_p x_p(t) \\ &\triangleq (C_0, 0) x_p(t) . \end{aligned} \quad (2.3.22b)$$

It is clear from (2.3.3f) that $B_p(\cdot)$: $\mathbb{R} \to \Sigma$ is a bounded operator. We will show that C_p: $\Sigma \to \mathbb{R}$ is also a bounded operator. In the following, t will be assumed to be fixed and omitted for simplicity.

Proposition 2.3.2: C_p:$\Sigma \to \mathbb{R}$ is a bounded operator.

Proof: Consider $x_p = (\bar{v}, \bar{u})^T \in \Sigma = V \times V_0$, where $\bar{v} = (v(\cdot), v(1), v'(1))^T \in V$ and $\bar{u} = (u(\cdot), u_1, u_2)^T \in V_0$. Referring to (2.3.3b), (2.3.3g), we consider the following two cases of different types of sensors:

Case I: Point displacement sensor.

In this case,

$$C_p x_p = (C_0,\ 0)\begin{bmatrix}\overline{v}\\ \overline{u}\end{bmatrix} = C_0\overline{v} = v(1). \tag{2.3.23}$$

As a consequence of (2.3.21a), (2.3.15a), (2.3.16b), we have $|v(1)| \le \|v''\|_{L^2([0,1])}$. Note that

$$\|x_p\|_\Sigma = \sqrt{\|\overline{v}\|_V^2 + \|\overline{u}\|_{V_0}^2}\,. \tag{2.3.24a}$$

Dividing (2.3.23) by (2.3.24a), we get

$$\begin{aligned}\frac{|C_p x_p|}{\|x_p\|_\Sigma} = \frac{|v(1)|}{\|x_p\|_\Sigma} &= \frac{|v(1)|}{\sqrt{\|\overline{v}\|_V^2 + \|\overline{u}\|_{V_0}^2}}\\ &\le \frac{\|v''\|_{L^2([0,1])}}{\|\overline{v}\|_V} = \frac{\|v''\|_{L^2([0,1])}}{\sqrt{\frac{EI}{m}}\|v''\|_{L^2([0,1])}} = \sqrt{\frac{m}{EI}}\,.\end{aligned} \tag{2.3.24b}$$

Hence, $C_p\colon \Sigma \to \mathbb{R}$ is a bounded operator.

Case II: Point angle-of-rotation sensor.

In this case,

$$C_p x_p = (C_0,\ 0)\begin{bmatrix}\overline{v}\\ \overline{u}\end{bmatrix} = C_0\overline{v} = v'(1). \tag{2.3.25}$$

As a consequence of (2.3.21a), (2.3.16a), we have $|v'(1)| \le \|v''\|_{L^2([0,\,1])}$. The remaining proof of this case is similar to that of case I. ∎

Remark 2.3.2: It is clear from the above proof that the resulting operator $C_p(\cdot)$ is also bounded if the point sensor is located at any place on the beam.

∎

Now we will see how the operator A_p is defined so that it will generate a strongly continuous semigroup. First we choose the domain of A_p to be

$$D(A_p) = R\left(\begin{bmatrix}-A_0^{-1}\tilde{D}_0 & -A_0^{-1}\\ I & 0\end{bmatrix}\right) \subset \Sigma, \tag{2.3.26}$$

where $\tilde{A_0^{-1}D_0}$ is the bounded extension of $A_0^{-1}D_0$ to V and $R(T)$ denotes the range of the operator T. It follows from (2.3.3h) that $\tilde{A_0^{-1}D_0}$ is the operator of constant multiplication defined by $\tilde{A_0^{-1}D_0}v = \frac{c}{E}v$, $\forall\ v \in V$ and, hence, we have

$$D(A_p) = \{(\bar{v}_1, \bar{v}_2)^T \mid \bar{v}_1 = \frac{c}{E}\bar{u}_0 + \bar{u}_1,\ \bar{v}_2 = -\bar{u}_0 + \bar{u}_2,\ \bar{u}_1 \& \bar{u}_2 \in D(A_0),\ \bar{u}_0 \in \{0\} \cup (V - D(A_0))\}, \tag{2.3.27a}$$

where $V - D(A_0) \triangleq \{v \mid v \in V \text{ and } v \notin D(A_0)\}$. For any $v_p \in D(A_p)$ defined by (2.3.27a), we define

$$A_p v_p \triangleq \begin{bmatrix} 0 & I \\ -A_0 & -D_0 \end{bmatrix} \begin{bmatrix} \frac{c}{E}\bar{u}_0 + \bar{u}_1 \\ -\bar{u}_0 + \bar{u}_2 \end{bmatrix} \triangleq \begin{bmatrix} -\bar{u}_0 + \bar{u}_2 \\ -A_0\bar{u}_1 - D_0\bar{u}_2 \end{bmatrix}. \tag{2.3.27b}$$

Now we show that the operator A_p is well defined. Suppose $v_p^1 = v_p^2 \in D(A_p)$. Referring to (2.3.27a), we have the following representations: $v_p^1 = (\bar{v}_1^1, \bar{v}_2^1)^T$ with $\bar{v}_1^1 = \frac{c}{E}\bar{u}_0^1 + \bar{u}_1^1$ and $\bar{v}_2^1 = -\bar{u}_0^1 + \bar{u}_2^1$; $v_p^2 = (\bar{v}_1^2, \bar{v}_2^2)^T$ with $\bar{v}_1^2 = \frac{c}{E}\bar{u}_0^2 + \bar{u}_1^2$ and $\bar{v}_2^2 = -\bar{u}_0^2 + \bar{u}_2^2$. From the assumption that $v_p^1 = v_p^2$, we have $\bar{u}_0^2 = \bar{u}_0^1 + w$, $\bar{u}_1^2 = \bar{u}_1^1 - \frac{c}{E}w$, and $\bar{u}_2^2 = \bar{u}_2^1 + w$, where $w \in D(A_0)$. It is then straightforward to show that $A_p v_p^1 = A_p v_p^2$.

Proposition 2.3.3 [Gib.1]: The operator A_p defined in (2.3.27a-b) generates a C_0-semigroup $\{e^{A_p t}\}_{t \geq 0}$ in Σ and $\|e^{A_p t}\|_\Sigma \leq 1$, $\forall\ t \geq 0$. ■

Now we show that Assumption 2.2.3 is also satisfied. We first characterize the spectrum of A_p. To begin with, Lemma 2.3.1 shows that

$$A_0\eta_n = \omega_n^2\eta_n, \tag{2.3.28}$$

where ω_n's and η_n's are, respectively, the natural frequencies and mode shapes of free,

undamped oscillations.

Proposition 2.3.4: The spectrum of A_p is given by

$$\{\frac{-c}{2E}\omega_n^2 \pm \sqrt{\frac{c^2}{4E^2}\omega_n^4 - \omega_n^2}\} \cup \{-\frac{E}{c}\} . \tag{2.3.29}$$

The first set is the point spectrum (eigenvalues). The number, $-\frac{E}{c}$, is not an eigenvalue.

Proof: **(i) Point Spectrum:** Let $0 \neq x_p = (x_1, x_2)^T \in D(A_p)$ defined in (2.3.27a). Consider the equation $A_p x_p = \lambda x_p$. We have

$$\begin{bmatrix} 0 & 1 \\ -A_0 & -\frac{c}{E}A_0 \end{bmatrix}\begin{bmatrix} x_1 \\ x_2 \end{bmatrix} = \lambda \begin{bmatrix} x_1 \\ x_2 \end{bmatrix}, \tag{2.3.30}$$

which is equivalent to

$$x_2 = \lambda x_1 \tag{2.3.31a}$$

$$-A_0 x_1 - \frac{c}{E}A_0 x_2 = \lambda x_2. \tag{2.3.31b}$$

Substituting (2.3.31a) into (2.3.31b), we get

$$(\lambda^2 + \lambda\frac{c}{E}A_0 + A_0)x_1 = 0 . \tag{2.3.32}$$

Since $\{\eta_n\}$ is a complete basis in V, we can express

$$x_1 = \sum_n \alpha_n \eta_n . \tag{2.3.33}$$

Substituting (2.3.33) into (2.3.32) and applying (2.3.28), we get

$$\sum_n (\lambda^2 + \lambda\frac{c}{E}\omega_n^2 + \omega_n^2)\alpha_n \eta_n = 0. \tag{2.3.34a}$$

Therefore for all n such that $\alpha_n \neq 0$, we must have that

$$\lambda^2 + \lambda\frac{c}{E}\omega_n^2 + \omega_n^2 = 0. \tag{2.3.34b}$$

It is easy to see that λ cannot simultaneously satisfy the above equations for more than two different values of ω_n^2. Therefore we know the eigenvalues are

$$\lambda_n^+ = \frac{c}{2E}\omega_n^2 + \sqrt{\frac{c^2}{4E^2}\omega_n^4 - \omega_n^2}, \quad \lambda_n^- = \frac{c}{2E}\omega_n^2 - \sqrt{\frac{c^2}{4E^2}\omega_n^4 - \omega_n^2}, \tag{2.3.35}$$

with the corresponding eigenvectors

$$\begin{bmatrix} \eta_n \\ \lambda_n^+\eta_n \end{bmatrix}, \quad \begin{bmatrix} \eta_n \\ \lambda_n^-\eta_n \end{bmatrix}. \tag{2.3.36}$$

(ii) The spectrum other than the point spectrum: Suppose $\lambda \in \sigma(A_p)$ but is not a point spectrum. By definition, this means that $(\lambda I - A_p)$: $D(A_p) \to \Sigma$ is one-to-one and

$$R(\lambda I - A_p) \neq \Sigma, \tag{2.3.37}$$

where I is the identity operator in Σ. Let $y = (y_1, y_2)^T \in \Sigma$ with $y_1 \in V$ and $y_2 \in V_0$, and $x = (x_1, x_2)^T \in D(A_p)$. Now consider $(\lambda I - A_p)x = y$, i.e.,

$$\begin{bmatrix} \lambda & -1 \\ A_0 & \lambda + \frac{c}{E}A_0 \end{bmatrix}\begin{bmatrix} x_1 \\ x_2 \end{bmatrix} = \begin{bmatrix} y_1 \\ y_2 \end{bmatrix}, \tag{2.3.38}$$

which is equivalent to

$$\begin{aligned} \lambda x_1 - x_2 &= y_1 \\ A_0x_1 + \lambda x_2 + \frac{c}{E}A_0x_2 &= y_2. \end{aligned} \tag{2.3.39}$$

It follows from (2.3.27a) that x_1 and x_2 can be expressed as

$$\begin{aligned} x_1 &= \frac{c}{E}u_0 + u_1 \\ x_2 &= -u_0 + u_2, \end{aligned} \tag{2.3.40}$$

where $u_1 \& u_2 \in D(A_0)$ and $u_0 \in \{0\} \cup (V - D(A_0))$. Substituting the above equation into (2.3.39), we get

$$(\frac{c}{E}\lambda + 1)u_0 + \lambda u_1 - u_2 = y_1 \tag{2.3.41a}$$

$$A_0 u_1 + \lambda(-u_0 + u_2) + \frac{c}{E} A_0 u_2 = y_2. \tag{2.3.41b}$$

If $\lambda \neq -\frac{E}{c}$, we can always find u_0, u_1, and u_2 such that (2.3.41a-b) is satisfied for any $y \in \Sigma$ because $R(A_0) = V_0$. If $\lambda = -\frac{E}{c}$, then (2.3.41a) becomes $\lambda u_1 - u_2 = y_1$. Since u_1, $u_2 \in D(A_0)$, (2.3.41a) cannot be satisfied if $y_1 \in V - D(A_0)$. It is easy to see from (2.3.39) that if $\lambda = -\frac{E}{c}$ and $y_1 = y_2 = 0$, then $x_1 = x_2 = 0$. Therefore $(-\frac{E}{c}I - A_p)$: $D(A_p) \to \Sigma$ is one-to-one. Hence $\{-\frac{E}{c}\}$ belongs to the spectrum of A_p, but is not a point spectrum. The proof is therefore complete. ∎

The diagram for the spectrum of A_p is shown in Figure 2.3. Note that $-\frac{E}{c}$ is an accumulation point of the point spectrum $\{\frac{c}{2E}\omega_n^2 + \sqrt{\frac{c^2}{4E^2}\omega_n^4 - \omega_n^2}\}_{n \in \mathbf{N}}$. Therefore to have Assumption 2.2.3 hold, the stability margin α has to be chosen less than $\frac{E}{c}$. From Remark 2.3.1, we know that $\{\begin{bmatrix}\eta_n \\ 0\end{bmatrix}, \begin{bmatrix}0 \\ \eta_n\end{bmatrix}\}_{n \in \mathbf{N}}$ is an orthogonal basis in Σ. It is clear that, for each n, $span\ \{\begin{bmatrix}\eta_n \\ \lambda_n^+\eta_n\end{bmatrix}, \begin{bmatrix}\eta_n \\ \lambda_n^-\eta_n\end{bmatrix}\} = span\ \{\begin{bmatrix}\eta_n \\ 0\end{bmatrix}, \begin{bmatrix}0 \\ \eta_n\end{bmatrix}\}$. Therefore the eigenvectors of the operator A form a basis for Σ. Let Σ_+ denote the finite dimensional space spanned by the eigenvectors corresponding with the eigenvalues in the right half plane $U_{-\alpha}$ and let Σ_- be the space spanned by the other eigenvectors. Then

$$\Sigma = \Sigma_- \oplus \Sigma_+ \tag{2.3.42}$$

and Σ_- and Σ_+ are both invariant spaces of A_p, i.e.,

$$A_p\Sigma_+ \subset \Sigma_+, \quad A_p\Sigma_- \subset \Sigma_-. \tag{2.3.43}$$

It follows that (2.2.1) can be decomposed in the form of (2.2.6). It is then straightforward to check whether (A_{p+}, B_{p+}) is controllable and (A_{p+}, C_{p+}) is observable. In most cases, these conditions are satisfied [Laf.1]. The only thing that remains is to prove that A_{p-} is the infinitesimal generator of an α-stable C_0-semigroup on Σ_-. From [Hua.1], we know that A_p generates an analytic semigroup in Σ. Therefore the operator A_p restricted to Σ_-, denoted by $A_{p,|\Sigma_-}$, also generates an analytic semigroup $\{e^{A_{p,|\Sigma_-}t}\}_{t \geq 0}$. Since $A_{p,|\Sigma_-}$ generates an analytic semigroup, the following *spectrum determined growth assumption* is satisfied [Tri.1],

$$\sup \mathrm{Re}\,(\sigma(A_{p,|\Sigma_-})) = \lim_{t\to\infty} \frac{\ln |e^{A_{p,|\Sigma_-}t}|}{t}\,. \tag{2.3.44}$$

We conclude that $A_{p,|\Sigma_-}$ is the infinitesimal generator of an α-stable C_0-semigroup because $\sigma(A_{p,|\Sigma_-}) \subset D_{-\alpha}$.

Remark 2.3.3: We have shown that the bending motion of a flexible cantilever beam with boundary point force/moment actuators and point displacement/angle-of-rotation sensors can be transformed into the standard formulation (2.2.1) with Assumptions 2.3.1-3 satisfied.

■

2.4 Stability of The Feedback System

Consider the feedback system $S(P, K)$ shown in Figure 2.1. We assume the compensator, K, to be *finite dimensional, linear, time-invariant and minimal*, with state equations

$$\begin{aligned} \dot{x}_c(t) &= A_c x_c(t) + B_c e_1(t) \ , \\ y_1(t) &= C_c x_c(t) + D_c e_1(t) \ , \end{aligned} \tag{2.4.1}$$

where $x_c(t) \in \mathbb{R}^{n_c}$, $e_1(t) \in \mathbb{R}^{n_o}$, $y_1(t) \in \mathbb{R}^{n_i}$ and A_c, B_c, C_c and D_c are matrices of appropriate dimension. The compensator transfer function is $G_c(s) = C_c(sI_{n_c} - A_c)^{-1}B_c + D_c$. To ensure well-posedness of the feedback system, we assume that $\det(I_{n_i} + D_c D_p) \neq 0$.

We define the product space $H = Z \times \mathbb{R}^{n_c}$. Since $e_1 = u_1 - y_2$ and $e_2 = y_1 + u_2$, the state equations for the feedback system are

$$\begin{aligned} \begin{bmatrix} \dot{x}_p \\ \dot{x}_c \end{bmatrix} &= A \begin{bmatrix} x_p \\ x_c \end{bmatrix} + B \begin{bmatrix} u_1 \\ u_2 \end{bmatrix} \ , \\ \begin{bmatrix} e_1 \\ e_2 \end{bmatrix} &= C \begin{bmatrix} x_p \\ x_c \end{bmatrix} + D \begin{bmatrix} u_1 \\ u_2 \end{bmatrix} \ , \end{aligned} \tag{2.4.2}$$

where

$$A = \begin{bmatrix} A_p - B_p D_c (I_{n_o} + D_p D_c)^{-1} C_p & B_p (I_{n_i} + D_c D_p)^{-1} C_c \\ -B_c (I_{n_o} + D_p D_c)^{-1} C_p & A_c - B_c (I_{n_o} + D_p D_c)^{-1} D_p C_c \end{bmatrix} , \tag{2.4.3a}$$

$$B = \begin{bmatrix} B_p D_c (I_{n_o} + D_p D_c)^{-1} & B_p (I_{n_i} + D_c D_p)^{-1} \\ B_c (I_{n_o} + D_p D_c)^{-1} & -B_c (I_{n_o} + D_p D_c)^{-1} D_p \end{bmatrix} , \tag{2.4.3b}$$

$$C = \begin{bmatrix} -(I_{n_o} + D_p D_c)^{-1} C_p & -(I_{n_o} + D_p D_c)^{-1} D_p C_c \\ -D_c (I_{n_o} + D_p D_c)^{-1} C_p & (I_{n_i} + D_c D_p)^{-1} C_c \end{bmatrix} , \tag{2.4.3c}$$

$$D = \begin{bmatrix} (I_{n_o} + D_p D_c)^{-1} & -(I_{n_o} + D_p D_c)^{-1} D_p \\ D_c (I_{n_o} + D_p D_c)^{-1} & (I_{n_i} + D_c D_p)^{-1} \end{bmatrix} . \tag{2.4.3d}$$

The domain $D(A) = D(A_p) \times \mathbb{R}^{n_c} \subset H$.

Remark 2.4.1: It follows from [Paz.1, p. 76], that since (i) all the operators in the matrix A except A_p are bounded, and (ii) diag(A_p,0) generates a C_0-semigroup, the operator A also generates a C_0–semigroup, $\{e^{At}\}_{t \geq 0}$.

■

Let $x = [x_p, x_c] \in H$. Then the formula $x(t) = e^{At}x_0 + \int_0^t e^{A(t-\tau)}Bu(\tau)d\tau$ defines a *mild solution* of (2.4.2) [Paz.1]. We therefore define the *exponential stability* of the feedback system $S(P, K)$ in terms of the semigroup $\{e^{At}\}_{t \geq 0}$.

Definition 2.4.1: For any $\alpha \geq 0$, the feedback system S(P , K) is α–stable if the semigroup $\{e^{At}\}_{t \geq 0}$ is α–stable. ■

Remark 2.4.2: It was shown in [Jac.1] that, under the above assumptions, the feedback system $S(P, K)$ is also α–stabilizable and α–detectable. ■

From the decomposition property in (2.2.6) for α–stabilizable and α–detectable systems, we can easily deduce the following relationship between α–stability of the feedback system and the spectrum of A, first established in [Jac.1]:

Proposition 2.4.1: If the above assumptions hold, the feedback system is α–stable if and only if $U_{-\alpha}$ is contained in $\rho(A)$. ■

Remark 2.4.3: Note that Proposition 2.4.1 does not hold for a general infinite dimensional feedback system. We refer the reader to [Zab.2] for a counter-example. ■

As an extension from finite dimensional case [Des.3], we define *the characteristic function* $\chi : \mathbb{C} \to \mathbb{C}$, of the feedback system $S(P, K)$, by

$$\chi(s) \triangleq \det(sI_{n_+} - A_{p+})\det(sI_{n_c} - A_c)\det(I_{n_i} + G_c(s)G_p(s)) \ , \tag{2.4.4}$$

where A_{p+} is defined as in (2.2.6) and n_+ is the dimension of A_{p+}. To relate the zeros of $\chi(s)$ to the α-stability of the feedback system, we apply the following Weinstein-Aronszajn (W-A) formula ([Kat.1, p. 247]).

The W-A Formula: Let F be a closed operator in the Banach space X. Let Q be a bounded operator in X, and suppose that $R \triangleq R(Q)$ is finite-dimensional. Let $y: \mathbb{C} \to \mathbb{C}$, defined by

$y(s) = \det(I_R + (Q(F - sI)^{-1})|_R)$, be the associated *W-A determinant*, with I_R the identity operator in R and $(Q(F - sI)^{-1})|_R$ the restriction of $Q(F - sI)^{-1}$ to R. If Δ is a domain of the complex plane consisting of points of $\rho(F)$ and of isolated eigenvalues of F with finite multiplicities, then $y(s)$ is meromorphic in Δ. Next, we define the *multiplicity function* $v(s;y)$ of $y(s)$ by

$$v(s;y) = \begin{Bmatrix} k & \text{if } s \text{ is a zero of } y \text{ of order } k \\ -k & \text{if } s \text{ is a pole of } y \text{ of order } k \\ 0 & \text{for other } s \in \Delta \end{Bmatrix}, \tag{2.4.5a}$$

and, for any closed operator $G:X \to X$, we define the *multiplicity function* $\bar{v}\ (s;G)$ by

$$\bar{v}\ (s;G) = \begin{Bmatrix} 0 & \text{if } s \in \rho(G) \\ \dim(P) & \text{if } s \text{ is an isolated point of } \sigma(G) \\ +\infty & \text{in all other cases} \end{Bmatrix}, \tag{2.4.5b}$$

where P is the projection associated with an isolated point of $\sigma(G)$ (see [Kat.1, p.180]). Then the W-A formula relates the multiplicity function of the operator $F + Q$ to those of F and $y(s)$, as follows:

$$\bar{v}(s;F + Q) = \bar{v}(s;F) + v(s;y), \forall\ s \in \Delta\ . \tag{2.4.5c}$$

Next, for any function f: $\mathbb{C} \to \mathbb{C}$, we define $Z(f) \triangleq \{s \in \mathbb{C} \mid f(s) = 0\}$ to be its set of zeros.

Theorem 2.4.1: The system $S(P, K)$ is α–stable if and only if $Z(\chi) \subset D_{-\alpha}$.

Proof: We begin by decomposing the operator A (in (2.4.3a)) into the form $A = F + Q$, as shown below, with the plant decomposed as in (2.2.6) and λ_c such that $\mathrm{Re}(\lambda_c) < -\alpha$,

$$F = \begin{bmatrix} A_{p-} & 0 & 0 \\ 0 & \lambda_c I_{n_+} & 0 \\ 0 & 0 & \lambda_c I_{n_c} \end{bmatrix}, \tag{2.4.6a}$$

$$Q = \begin{bmatrix} -B_{p-}D_c(I_{n_o} + D_pD_c)^{-1}C_{p-} & -B_{p-}D_c(I_{n_o} + D_pD_c)^{-1}C_{p+} & B_{p-}(I_{n_i} + D_cD_p)^{-1}C_c \\ -B_{p+}D_c(I_{n_o} + D_pD_c)^{-1}C_{p-} & A_{p+} - B_{p+}D_c(I_{n_o} + D_pD_c)^{-1}C_{p+} - \lambda_c I_{n+} & B_{p+}(I_{n_i} + D_cD_p)^{-1}C_c \\ -B_c(I_{n_o} + D_pD_c)^{-1}C_{p-} & -B_c(I_{n_o} + D_pD_c)^{-1}C_{p+} & A_c - B_c(I_{n_o} + D_pD_c)^{-1}D_pC_c - \lambda_c I_{n_c} \end{bmatrix}. \tag{2.4.6b}$$

It is easy to see that F generates the C_0-semigroup $\{e^{Ft}\}_{t \geq 0}$, where $e^{Ft} = diag(e^{A_{p-}t}, e^{\lambda_c t}I_{n+}, e^{\lambda_c t}I_{n_c})$, and that $(F - sI)$ is invertible for $s \in U_{-\alpha}$; $Q = A - F$ is a bounded operator, and $R(Q)$ is finite dimensional. Consider $s \in U_{-\alpha} \subset \rho(A_{p-})$. Since $(F - sI)^{-1}$ exists and is bounded, we can define $V(s)$ by

$$V(s) = Q(F - sI)^{-1}$$

$$= \begin{bmatrix} -B_{p-}D_c(I_{n_o}+D_pD_c)^{-1}C_{p-}(A_{p-}-sI)^{-1} & -B_{p-}D_c(I_{n_o} + D_pD_c)^{-1}C_{p+}(\lambda_c - s)^{-1} & B_{p-}(I_{n_i} + D_cD_p)^{-1}C_c(\lambda_c - s)^{-1} \\ -B_{p+}D_c(I_{n_o} + D_pD_c)^{-1}C_{p-}(A_{p-}-sI)^{-1} & (A_{p+} - B_{p+}D_c(I_{n_o} + D_pD_c)^{-1}C_{p+} - \lambda_c I_{n+})(\lambda_c - s)^{-1} & B_{p+}(I_{n_i} + D_cD_p)^{-1}C_c(\lambda_c - s)^{-1} \\ -B_c(I_{n_o} + D_pD_c)^{-1}C_{p-}(A_{p-} - sI)^{-1} & -B_c(I_{n_o} + D_pD_c)^{-1}C_{p+}(\lambda_c - s)^{-1} & (A_c - B_c(I_{n_o} + D_pD_c)^{-1}D_pC_c - \lambda_c I_{n_c})(\lambda_c - s)^{-1} \end{bmatrix}. \tag{2.4.7}$$

Let $B_0 \triangleq R(Q) = R(B_p) \times \mathbb{R}^{n_c} = R(B_{p-}) \times R(B_{p+}) \times \mathbb{R}^{n_c}$ and let $V_{B_0}(s)$ denote the restriction of $V(s)$ to B_0. Then $\det(I + V(s)) \triangleq \det(I_{B_0} + V_{B_0}(s))$ is well defined [Kat.1]. We will show that $\det(I_{B_0} + V_{B_0}) = \chi(s)$ and then apply the W-A formula.

Let $b_j \triangleq B_{p-}e_j$, $j = 1,2,\ldots,n_i$, where $\{e_j\}_{j=1}^{n_i}$ is the standard unit basis in $\mathbb{R}^{n_i}$. Suppose, without loss of generality, that $\bar{n} \leq n_i$ is a positive integer such that $\{b_j\}_{j=1}^{\bar{n}}$ is the largest linearly independent subset of $\{b_j\}_{j=1}^{n_i}$. Using $\{b_j\}_{j=1}^{\bar{n}}$ as a basis for $R(B_{p-})$, the linear operator B_{p-} assumes the matrix form $B_{p-} = (I_{\bar{n}\times\bar{n}} \mid \tilde{B}_{p-}) \in \mathbb{R}^{\bar{n}\times n_i}$, where column i of $\tilde{B}_{p-}$ is obtained by expressing $b_{\bar{n}+i}$ in terms of the basis $\{b_j\}_{j=1}^{\bar{n}}$. Let $\bar{B} \triangleq (b_1, b_2, \ldots, b_{\bar{n}})$. Then

$$V_{B_0} = \begin{bmatrix} -B_{p-}D_c(I_{n_o}+D_pD_c)^{-1}C_{p-}(A_{p-}-sI)^{-1}\overline{B} & -B_{p-}D_c(I_{n_o}+D_pD_c)^{-1}C_{p+}(\lambda_c-s)^{-1} & B_{p-}(I_{n_i}+D_cD_p)^{-1}C_c(\lambda_c-s)^{-1} \\ -B_{p+}D_c(I_{n_o}+D_pD_c)^{-1}C_{p-}(A_{p-}-sI)^{-1}\overline{B} & (A_{p+}-B_{p+}D_c(I_{n_o}+D_pD_c)^{-1}C_{p+}-\lambda_cI_{n+})(\lambda_c-s)^{-1} & B_{p+}(I_{n_i}+D_cD_p)^{-1}C_c(\lambda_c-s)^{-1} \\ -B_c(I_{n_o}+D_pD_c)^{-1}C_{p-}(A_{p-}-sI)^{-1}\overline{B} & -B_c(I_{n_o}+D_pD_c)^{-1}C_{p+}(\lambda_c-s)^{-1} & (A_c-B_c(I_{n_o}+D_pD_c)^{-1}D_pC_c-\lambda_cI_{n_c})(\lambda_c-s)^{-1} \end{bmatrix}, \tag{2.4.8a}$$

$$= \begin{bmatrix} -B_{p-}D_c(I_{n_o}+D_pD_c)^{-1}M(s) & -B_{p-}D_c(I_{n_o}+D_pD_c)^{-1}C_{p+}(\lambda_c-s)^{-1} & B_{p-}(I_{n_i}+D_cD_p)^{-1}C_c(\lambda_c-s)^{-1} \\ -B_{p+}D_c(I_{n_o}+D_pD_c)^{-1}M(s) & (A_{p+}-B_{p+}D_c(I_{n_o}+D_pD_c)^{-1}C_{p+}-\lambda_cI_{n+})(\lambda_c-s)^{-1} & B_{p+}(I_{n_i}+D_cD_p)^{-1}C_c(\lambda_c-s)^{-1} \\ -B_c(I_{n_o}+D_pD_c)^{-1}M(s) & -B_c(I_{n_o}+D_pD_c)^{-1}C_{p+}(\lambda_c-s)^{-1} & (A_c-B_c(I_{n_o}+D_pD_c)^{-1}D_pC_c-\lambda_cI_{n_c})(\lambda_c-s)^{-1} \end{bmatrix}, \tag{2.4.8b}$$

where $M(s) \triangleq [r_1(s), r_2(s), \ldots, r_{\overline{n}}(s)] \in \mathbb{C}^{n_o \times \overline{n}}$ with $r_i(s) \triangleq C_{p-}(A_{p-} - sI)^{-1}b_i$, $1 \le i \le \overline{n}$. Because each element in (2.4.8b) is in matrix form, it is straightforward to show that

$$\det(I_{B_0} + V_{B_0}(s)) = \det(sI_{n+} - A_{p+})\det(sI_{n_c} - A_c)\det(I_{n_i} + G_c(s)G_p(s)) = \chi(s)\ . \tag{2.4.9}$$

Now we use the W-A formula. Let F and Q be defined as in (2.4.6a-b), so that $A = F + Q$. Since $U_{-\alpha} \subset \rho(F)$, we can choose $\Delta = U_{-\alpha}$. Then $\chi(s) = \det(I_R + (Q(F - sI)^{-1})|_R)$, for $s \in U_{-\alpha}$. Applying the W-A formula, we obtain $\tilde{v}(s;A) = \tilde{v}(s;F) + v(s;\chi)$ for all $s \in U_{-\alpha}$. Since $U_{-\alpha} \subset \rho(F)$, it follows that $\tilde{v}(s;F) = 0$ for all $s \in U_{-\alpha}$, and hence $\tilde{v}(s;A) = v(s;\chi)$ for all $s \in U_{-\alpha}$, which implies that (i) the operator A has only finitely many eigenvalues in $U_{-\alpha}$ and (ii)

$$U_{-\alpha} \cap \sigma(A) = U_{-\alpha} \cap Z(\chi(s))\ . \tag{2.4.10}$$

Now suppose that the system $S(P, K)$ is α–stable. Then it follows from Proposition 2.4.1 that $U_{-\alpha} \subset \rho(A)$, which is equivalent to saying that $U_{-\alpha} \cap \sigma(A)$ is the empty set. Hence, from (2.4.10), $U_{-\alpha} \cap Z(\chi(s))$ is the empty set, which implies that $Z(\chi(s)) \subset D_{-\alpha}$.

Next, suppose that $Z(\chi(s)) \subset D_{-\alpha}$. Then $U_{-\alpha} \cap Z(\chi(s))$ must be empty. It now follows from (2.4.10) and Proposition 2.4.1 that $S(P, K)$ is α–stable, which completes our proof. ■

2.5 Concluding Remarks

In this chapter, we have modeled the class of infinite dimensional plants for which we consider control system design in this thesis. We have shown that the planar bending motion of a flexible cantilever beam with boundary point force/moment actuators and point displacement/angle-of-rotation sensors belongs to this class of infinite dimensional plants. We have defined the characteristic function for the closed-loop feedback system and related its zeros to the exponential stability of the feedback system. This result is useful for the design of stabilizing compensators in the subsequent chapters. In the next chapter, we assume that the infinite dimensional plant is exponentially stable and design a simple proportional-plus-multi-integral compensator for it.

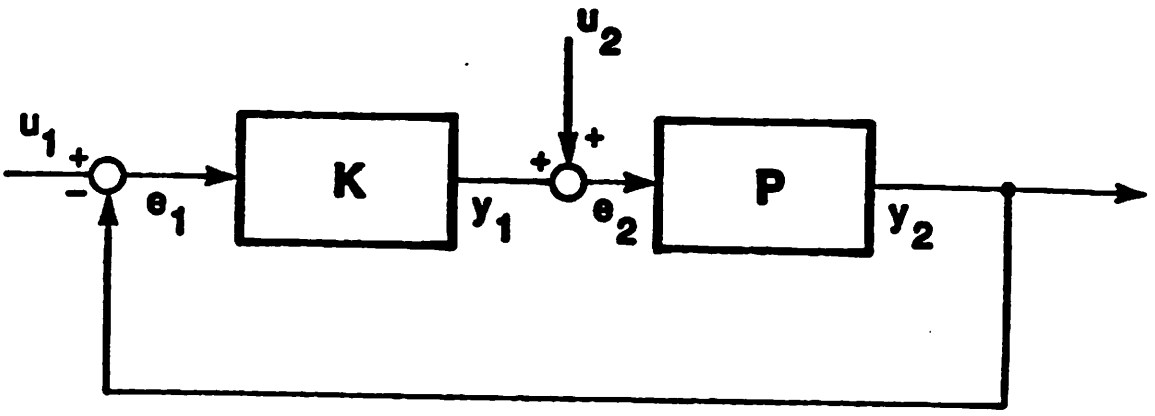

Figure 2.1: The feedback system $S(P, K)$.

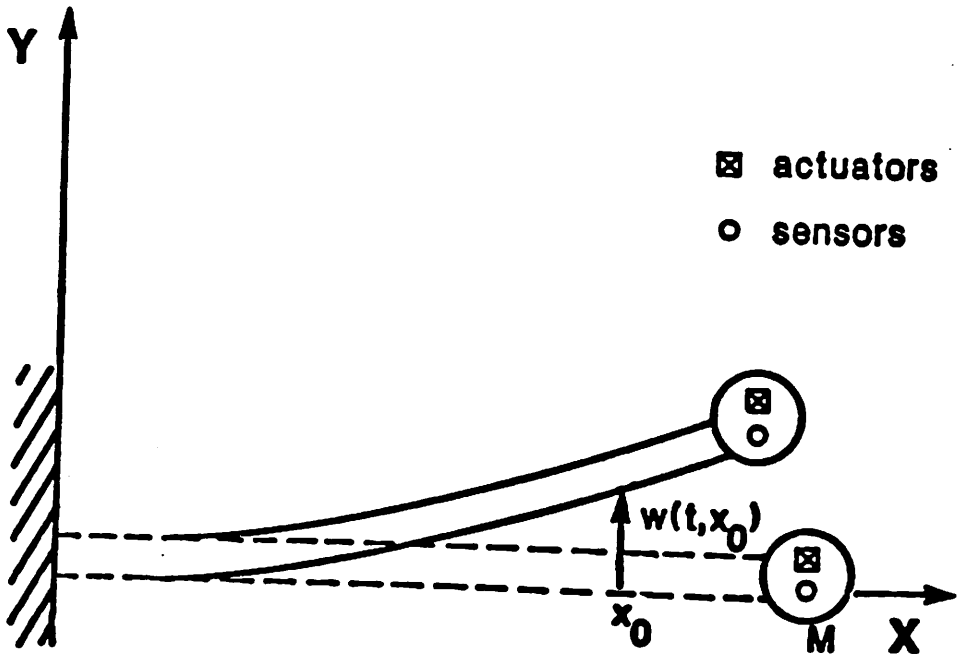

Figure 2.2: Planar bending motion of a flexible beam.

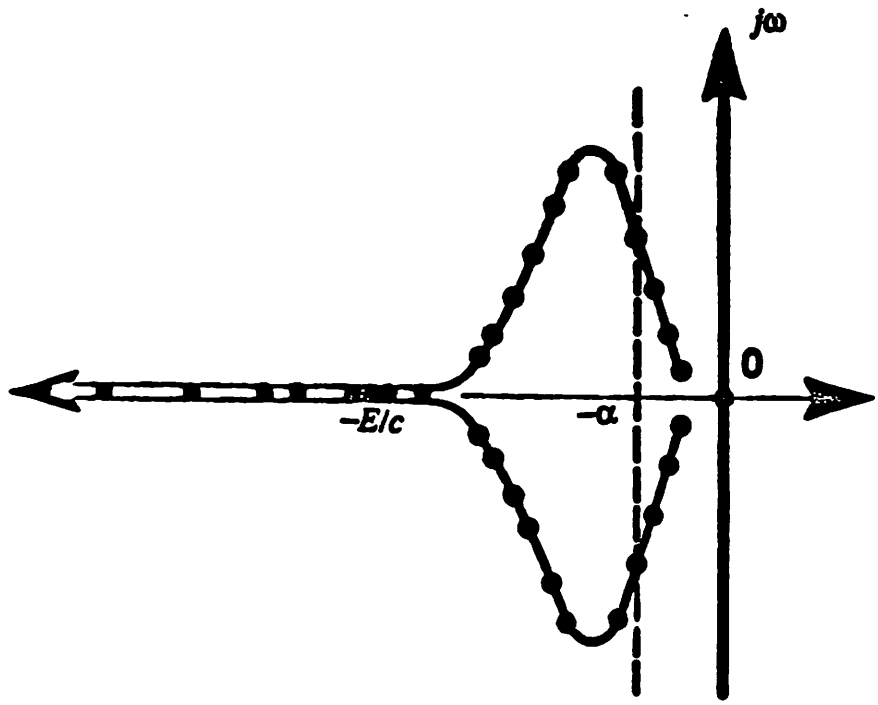

Figure 2.3: The spectrum of A_p in (2.3.27).

CHAPTER 3

THE DESIGN OF PROPORTIONAL-PLUS-MULTI-INTEGRAL STABILIZING COMPENSATORS

3.1 Introduction

Exponential stability, asymptotic tracking, and disturbance rejection are among the most fundamental requirements in control system design, and they have received a considerable amount of attention in the literature. In [Dav.1-2], Davison presented a characterization of a minimal-order, robust, error-driven servocompensator that achieves asymptotic tracking and disturbance rejection for finite dimensional systems. The result was extended to distributed parameter systems in [Cal.1, Des.1] in which, because of the coprime factorization used to obtain it, the compensator turns out to be infinite dimensional. Since practical considerations require a finite dimensional compensator, the approach in [Cal.1] must be supplemented with cumbersome approximation and order reduction techniques. In [Poh.1-2, Koi.1, Jus.1, Log.1-2], it is shown that feedback systems with exponentially stable infinite-dimensional plants can be stabilized and regulated by a multivariable proportional-plus-integral compensator of the form:

$$\frac{1}{s}kK_I + K_p \ , \quad 0 < k \leq k^* \ , \tag{3.1.1}$$

where K_I and K_p are real matrices whose dimensions are related to the input and the output dimensions of the plant, k^* is some real positive number, and s is the Laplace parameter.

In this chapter, we present a method for designing finite dimensional, *proportional-plus-multi-integral* stabilizing compensators for the class of feedback systems discussed in Chapter 2, with additional assumptions that the infinite dimensional plants are exponentially stable and their transfer matrix evaluated at $s = 0$ has maximum rank. The resulting feedback systems are

internally stable and asymptotically track polynomial inputs and suppress polynomial disturbances. Our analysis makes use of the characteristic function defined in Section 2.4, of Theorem 2.4.1, and of the Rouche theorem in complex variable theory [Chu.1]. The resulting proofs are quite straightforward.

In Section 3.2 we give some preliminary results about the stability of the feedback system obtained by using proportional-plus-multi-integral compensators, applying the results presented in Section 2.4. The main results are established in Section 3.3. In Section 3.4 we give a numerical design example. We draw some concluding remarks in Section 3.5.

3.2 Preliminary Results

Consider the feedback system $S(P, K)$ introduced in Section 2.2.

Definition 3.2.1: In this chapter, we will use the term "*exponentially stable*" to mean "*α–stable with $\alpha = 0$*". ■

In addition to the assumptions in Section 2.2, we need the following assumptions.[1]

Assumption 3.2.1: The operator A_p generates an exponentially stable semigroup $\{e^{A_p t}\}_{t \geq 0}$, i.e., we can find $\alpha_0 > 0$ and $M_0 < \infty$ such that

$$\|e^{A_p t}\|_Z \leq M_0 e^{-\alpha_0 t}, \quad \forall\ t \geq 0 \tag{3.2.1}$$

■

Under Assumption 3.2.1, it follows from Section 2.2 that $U^o_{-\alpha_0} \subset \rho(A_p)$, $G_p(s)$ is analytic on $U^o_{-\alpha_0}$, and $\lim_{\substack{|s| \to \infty \\ \mathrm{Re}\, s > -\alpha_0}} G_p(s) = D_p$. Therefore $G_p(0) = -C_p A_p^{-1} B_p + D_p$ is well defined.

Assumption 3.2.2: The matrix $G_p(0)$ has maximum rank.

■

It is easy to show that the following is true:

[1] These assumptions are only required in this chapter.

Proposition 3.2.1: Suppose that Assumption 3.2.1 holds. Then there exist $M < \infty$ and $0 < \alpha_1 < \alpha_0$ such that each element of $G_p(s)$ denoted by $[g_p^{i,j}(s)]$ satisfies

$$|g_p^{i,j}(s)| \leq M \ , \ \forall \ s \in U_{-\alpha_1} \ , \ i = 1,2, \cdots ,n_o, \ j = 1,2, \cdots ,n_i \ . \tag{3.2.2}$$

■

We are required to design a *minimal, finite dimensional, proportional-plus-multi-integral* compensator, described by a differential equation of the form:

$$\begin{aligned} \dot{x}_c(t) &= A_c x_c(t) + B_c e_1(t) \ , \\ y_1(t) &= C_c x_c(t) + D_c e_1(t) \ , \end{aligned} \tag{3.2.3}$$

where $x_c(t) \in \mathbb{R}^{n_c}$, $e_1(t) \in \mathbb{R}^{n_o}$, $y_1(t) \in \mathbb{R}^{n_i}$, and A_c, B_c, C_c and D_c are matrices of appropriate dimension, with all the eigenvalues of A_c equal to zero, for integral action. Since $\sigma(A_c) = \{0\}$, the compensator transfer function is $G_c(s) = C_c(sI - A_c)^{-1}B_c + D_c = \sum_{j=0}^{m} F_j / s^j$, where each $F_j \in \mathbb{R}^{n_i \times n_o}$ and m depends on A_c.

Let the state-space matrices (A, B, C, D) of the closed-loop system be defined as in (2.4.2), (2.4.3a-d). The following result relating the exponential stability to the spectrum of the operator A is a special case of Proposition 2.4.1 in Chapter 2.

Proposition 3.2.2: The feedback system is exponentially stable if and only if $\mathbb{C}_+$ is contained in $\rho(A)$. ■

We define the *characteristic function* $\chi(s)$ of the system $S(P, K)$, by

$$\chi(s) = \det(sI_{n_c} - A_c) \det(I_{n_i} + G_c(s)G_p(s)) = s^{n_c} \det(I_{n_i} + G_c(s)G_p(s)) = s^{n_c} \det(I_{n_o} + G_p(s)G_c(s)) \ , \tag{3.2.4}$$

where the last equation comes from the fact that $\det(I_{n_i} + MN) = \det(I_{n_o} + NM)$ for any $M \in \mathbb{R}^{n_i \times n_o}$ and $N \in \mathbb{R}^{n_o \times n_i}$. The following proposition follows directly from Theorem 2.4.1.

Proposition 3.2.3: The system $S(P, K)$ is exponentially stable if and only if $Z(\chi) \subset \mathbb{C}_-$. ■

3.3 Stabilizing Proportional-Plus-Multi-Integral Compensators

We establish the existence of a proportional-plus-multi-integral stabilizing compensator in three steps. First we show that we can construct a proportional stabilizing compensator and then that we can construct an integral stabilizing compensator. Finally we combine and extend these two results to show that we can construct proportional-plus-multi-integral stabilizing compensators of arbitrary order. As a corollary to the results in [Cal.1], we show that these compensators result in asymptotic error-free tracking of polynomial inputs and in asymptotic polynomial output-disturbance suppression.

In the proofs to follow, we make use of the Rouche theorem, stated below [Chu.1].

The Rouche theorem: Let $f, g: \mathbb{C} \to \mathbb{C}$ be functions which are analytic inside and on a positively oriented (counterclockwise) simple closed contour C in the complex plane. If $|f(s)| > |g(s)|$ at each point s on C, then the functions $f(s)$ and $f(s) + g(s)$ have the same number of zeros, counting multiplicities, inside C. ■

Theorem 3.3.1: Consider the feedback system $S(P, K)$ in Figure 2.1 and suppose that $A_c = 0$, $B_c = 0$, $C_c = 0$ and $n_c = 0$. Then there exists a matrix $D_c \neq 0$ such that the closed-loop system is exponentially stable.

Proof: By Proposition 3.2.3, the system $S(P, K)$ is exponentially stable if and only if $Z[\det(I_{n_i} + D_c G_p(s))] \subset \mathbb{C}_-$. Suppose that $D_c = [d^{i,j}]$ and $G_p(s) = [g_p^{i,j}(s)]$. Then

$$\det(I_{n_c} + D_c G_p(s)) = \det([\Delta^{i,j} + \sum_{k=1}^{n_0} d^{i,k} g_p^{k,j}(s)]_{i,j}]$$

$$= 1 + \sum_{l=1}^{n_i} \sum_{k=1}^{n_0} d^{l,k} g_p^{k,l}(s) + \cdots \triangleq 1 + H(s) , \tag{3.3.1}$$

where $\Delta^{i,j} = 1$ when $i = j$ and $\Delta^{i,j} = 0$ otherwise, and $H(s)$ represents the first and higher order

terms in $d^{i,j}$ and $g_p^{i,j}(s)$. It follows from Proposition 3.2.1 that $\forall\ i,j$, there exist $M > 0$ and $0 < \alpha_1 < \alpha_0$ such that $|g_p^{i,j}(s)| < M$, for all $s \in \partial U_{-\alpha_1}$.[2] It is clear that we can always choose a matrix $D_c \neq 0$, with sufficiently small components, $d^{i,j}$, to ensure that $|H(s)| < 1$, for all $s \in \partial U_{-\alpha_1}$. In addition, $H(s)$ is an analytic function on $U_{-\alpha_1}$. Setting $C = \partial U_{-\alpha_1}$, $f(s) \equiv 1$ and $g(s) = H(s)$, we obtain from the Rouche theorem that $\det(I_{n_c} + D_c G_p(s)) = 1 + H(s)$ has the same number of zeros in $U_{-\alpha_1}$ as $f(\cdot)$, which is zero. Therefore $\det(I_{n_c} + D_c G_p(s))$ has no zeros on $\mathbb{C}_+ \subset U_{-\alpha_1}$. That is, $Z(\det(I_{n_c} + D_c G_p)) \subset \mathbb{C}_-$, which completes the proof. ■

Theorem 3.3.2: Suppose that $D_c = 0$ and $A_c = 0$, so that $G_c(s) = \frac{1}{s} C_c B_c$. Then there exists an $n_i \times n_o$ maximum-rank matrix F_I such that for any matrices B_c, C_c satisfying $C_c B_c = F_I$, the closed loop system is exponentially stable.

Proof: Case I: $n_i = n_o$, i.e., the plant and the compensator transfer functions are square matrices. Let $n_c = n_i = n_o$, B_c & $C_c \in \mathbb{R}^{n_c \times n_c}$ such that $C_c B_c = F_I \in \mathbb{R}^{n_c \times n_c}$. It follows from Proposition 3.2.3 and Equation (3.2.4), that the system is exponentially stable if

$$Z(\chi(s)) = Z(\det(sI_{n_c})\det(I_{n_c} + G_p(s)\frac{F_I}{s})) = Z(\det(sI_{n_c} + G_p(s)F_I)) \subset \mathbb{C}_- . \tag{3.3.2}$$

We denote the elements of F_I by $f_I^{i,j}$, so that $F_I = [f_I^{i,j}]$. Then

$$\det(sI_{n_c} + G_p(s)F_I) = s^{n_c} + s^{n_c-1}\sum_{l=1}^{n_c}\sum_{k=1}^{n_c} f_I^{l,k} g_p^{k,l}(s) + s^{n_c-2}(\ \cdots\ ) + \cdots + \det G_p(s)\det F_I . \tag{3.3.3}$$

Let $f(s) = s^{n_c}$ and let $g(s) = s^{n_c-1}\sum_{l=1}^{n_c}\sum_{k=1}^{n_c} f_I^{l,k} g_p^{k,l}(s) + s^{n_c-2}(\ \cdots\ ) + \cdots + \det G_p(s)\det F_I$.

Clearly, $f(s)$ and $g(s)$ are both analytic on $U_{-\alpha_1}$ for some α_1 satisfying $0 < \alpha_1 < \alpha_0$. Suppose that for some $\delta > 0$, $|f_I^{i,j}| < \delta$, for all i,j. Consider any $s \in \partial U_{-\alpha_1}$. We have

[2] In this section, the set of $\partial U_{-\alpha_1}$ includes the points at infinity in $U_{-\alpha_1}$.

$$|g(s)| \le |s^{n_c-1}|\,|\sum_{l=1}^{n_c}\sum_{k=1}^{n_c} f_l^{l,k} g_p^{k,l}(s)| + |s^{n_c-2}|\,|(\cdots)| + \cdots + |\det G_p(s)\det F_l|$$

$$\le |s|^{n_c-1} N_1 M\delta + |s|^{n_c-2} N_2 M^2\delta^2 + \cdots + N_{n_c} M^{n_c}\delta^{n_c}$$

$$\le N|s|^{n_c}\,(|s|^{-1}M\delta + |s|^{-2}M^2\delta^2 + |s|^{-3}M^3\delta^3 + \cdots + |s|^{-n_c}M^{n_c}\delta^{n_c}), \tag{3.3.4}$$

where N_i is the number of product terms in the coefficients of $|s|^{n-i}$, $N = \max_i N_i$, and $M > 0$ is defined in (3.2.2). Since $|s| \ge \alpha_1$ for any $s \in \partial U_{-\alpha_1}$, if $\delta < \dfrac{\alpha_1}{2NM}$, we have that

$$\left|\frac{g(s)}{f(s)}\right| = \frac{|g(s)|}{|f(s)|} \le N(|s|^{-1}M\delta + |s|^{-2}M^2\delta^2 + \cdots + |s|^{-n_c}M^{n_c}\delta^{n_c})$$

$$\le \frac{NM\delta}{|s|-M\delta} \le \frac{NM\delta}{\alpha_1-M\delta} \le \frac{2NM\delta}{\alpha_1} < 1\,. \tag{3.3.5}$$

Setting $C = \partial U_{-\alpha_1}$ and applying the Rouche theorem, we conclude that $\det(sI_{n_c} + G_p(s)F_l)$ has n_c zeros in $U_{-\alpha_1}$.

For any $\varepsilon > 0$, let $C_\varepsilon \triangleq \{s \in \mathbb{C} \mid |s + \varepsilon| = \varepsilon/2\}$. Clearly, if $\varepsilon \le 2\alpha_1/3$, then $C_\varepsilon \subset U_{-\alpha_1} \cap \mathbb{C}_-$. Since by Assumption 3.2.2, $\det G_p(0) \ne 0$, it follows by continuity that there exists an $\varepsilon_1 \in (0, 2\alpha_1/3)$ such that $\det G_p(-\varepsilon) \ne 0$ for all $0 \le \varepsilon \le \varepsilon_1$. Finally, there is an $\varepsilon_2 \in (0, \varepsilon_1)$ such that for all $\varepsilon \in (0, \varepsilon_2)$, if

$$F_l \triangleq G_p(-\varepsilon)^{-1}\varepsilon, \tag{3.3.6}$$

then $|f_l^{i,j}| < \alpha_1/2MN$ is satisfied for all i,j and (3.3.5) holds. Therefore $\det(sI_{n_c} + G_p(s)F_l)$ has n_c zeros in $U_{-\alpha_1}$. Note that the square matrix F_l has maximum rank. Now, using the first order expansion of $G_p(s)$ about $s = -\varepsilon$, in integral form, we obtain

$$\det(sI_{n_c} + G_p(s)F_l) = \det((s + \varepsilon)I_{n_c} + G_p(s)F_l - \varepsilon I_{n_c})$$

$$= \det\left[(s+\varepsilon)I_{n_c} + \left[G_p(-\varepsilon) + (s+\varepsilon)\int_0^1 G_p'(-\varepsilon + \tau(s+\varepsilon))d\tau\right]G_p(-\varepsilon)^{-1}\varepsilon - \varepsilon I_{n_c}\right]$$

$$= \det\left[(s+\varepsilon)I_{n_c} + \varepsilon(s+\varepsilon)\left[\int_0^1 G_p'(-\varepsilon + \tau(s+\varepsilon))d\tau\right]G_p(-\varepsilon)^{-1}\right]$$

$$= \det((s+\varepsilon)I_{n_c})\det(I_{n_c} + \varepsilon[\int_0^1 G_p'(-\varepsilon + \tau(s+\varepsilon))d\tau]G_p(-\varepsilon)^{-1})$$

$$= (s+\varepsilon)^{n_c}(1 + \varepsilon Q_1(s) + \varepsilon^2 Q_2(s) + \cdots + \varepsilon^{n_c} Q_{n_c}(s))$$

$$= (s+\varepsilon)^{n_c} + (s+\varepsilon)^{n_c}\varepsilon Q_1(s) + (s+\varepsilon)^{n_c}\varepsilon^2 Q_2(s) + \cdots + (s+\varepsilon)^{n_c}\varepsilon^{n_c} Q_{n_c}(s), \qquad (3.3.7)$$

where the functions $Q_i(s)$ are determined by the elements of the matrix $\left[\int_0^1 G_p'(-\varepsilon + \tau(s+\varepsilon))d\tau\right]G_p(-\varepsilon)^{-1}$ and $G_p'(-\varepsilon + \tau(s+\varepsilon))$ means $[dG_p(\eta)/d\eta]|_{\eta = -\varepsilon + \tau(s+\varepsilon)}$. It is easy to see that the $Q_i's$ are analytic on $U_{-\alpha_1}$ and therefore that they are analytic on and inside C_ε. Let $W_i = \max_{s\in U_{-\alpha}} |Q_i(s)|$ and let $W = \max_i W_i$. Let $f(s) \triangleq (s+\varepsilon)^{n_c}$ and let $g(s) \triangleq (s+\varepsilon)^{n_c}\varepsilon Q_1(s) + (s+\varepsilon)^{n_c}\varepsilon^2 Q_2(s) + \cdots + (s+\varepsilon)^{n_c}\varepsilon^{n_c} Q_{n_c}(s)$. Both of $f(\cdot)$ and $g(\cdot)$ are analytic on C_ε. Then if $\varepsilon < \min\{1/2, 1/2W, \varepsilon_2\}$, we have

$$\left|\frac{g(s)}{f(s)}\right| \le \varepsilon W_1 + \varepsilon^2 W_2 + \cdots + \varepsilon^{n_c} W_{n_c}$$

$$\le \varepsilon W\left[1 + \varepsilon + \cdots + \varepsilon^{n_c - 1}\right]$$

$$\le \frac{\varepsilon W}{1-\varepsilon} < 2\varepsilon W \le 1. \qquad (3.3.8)$$

Therefore we obtain $|f(s)| > |g(s)|$ for all $s \in C_\varepsilon$. It now follows from the Rouche Theorem that $\det(sI_{n_c} + G_p(s)F_I) = f(s) + g(s)$ has the same number of zeros, n_c, inside C_ε as $f(s)$. Since we

have

shown that $\det(sI_{n_c} + G_p(s)F_I)$ has n_c zeros in $U_{-\alpha_1}$, we know that $Z(\det(sI_{n_c} + G_p(s)F_I)) \subset C_\varepsilon \cup D_{-\alpha_1} \subset D_{-\varepsilon/2} \subset \mathbb{C}_-$. It follows from Proposition 3.2.3 that the system is exponentially stable.

Case II: $n_o < n_i$. Because of Assumption 3.2.2, without loss of generality, we may assume that the first n_o columns of $G_p(0)$ are linearly independent. Let $n_c = n_o$ and $B_c \in \mathbb{R}^{n_o \times n_o}$, $C_c \in \mathbb{R}^{n_i \times n_o}$ such that $C_c B_c = F_I \in \mathbb{R}^{n_i \times n_o}$. It follows from Proposition 3.2.3, that the system is exponentially stable if $Z[\det(sI_{n_c} + G_p(s)F_I)] \subset \mathbb{C}_-$. Let

$$G_{p,n_o}(s) \triangleq \begin{bmatrix} g_{1,1}(s) & \cdots & g_{1,n_o}(s) \\ g_{2,1}(s) & \cdots & g_{2,n_o}(s) \\ \vdots & & \vdots \\ g_{n_o,1}(s) & \cdots & g_{n_o,n_o}(s) \end{bmatrix} \tag{3.3.9}$$

Then by the above assumption, $\det G_{p,n_o}(0) \neq 0$. Let $\varepsilon > 0$ be such that $\det G_{p,n_o}(-\varepsilon) \neq 0$, and let

$$F_I = \begin{bmatrix} G_{p,n_o}(-\varepsilon)^{-1}\,\varepsilon \\ 0_{(n_i-n_o)\times n_o} \end{bmatrix} \in \mathbb{R}^{n_i \times n_o}, \tag{3.3.10}$$

which has maximum rank , n_o. Then, since $G_p(-\varepsilon)F_I = \varepsilon I_{n_o} = \varepsilon I_{n_c}$, similar to (3.3.7), we have

$$\begin{aligned} \det(sI_{n_c} + G_p(s)F_I) &= \det\left[(s+\varepsilon)I_{n_c} + \left[G_p(-\varepsilon) + (s+\varepsilon)\int_0^1 G_p'(-\varepsilon + \tau(s+\varepsilon))d\tau\right]F_I - \varepsilon I_{n_c}\right] \\ &= \det\left[(s+\varepsilon)I_{n_c} + \varepsilon(s+\varepsilon)\left[\int_0^1 G_{p,n_o}'(-\varepsilon + \tau(s+\varepsilon))d\tau\right]G_{p,n_o}(-\varepsilon)^{-1}\right]. \end{aligned} \tag{3.3.11}$$

The rest of the proof follows that for Case I.

Case III: $n_o > n_i$. Let $n_c = n_i$ and $B_c \in \mathbb{R}^{n_i \times n_o}$, $C_c \in \mathbb{R}^{n_i \times n_i}$ such that $C_c B_c = F_I \in \mathbb{R}^{n_i \times n_o}$. It follows from Proposition 3.2.3 that the system $S(P, K)$ is exponentially stable if

$$Z(\det(sI_{n_c})\det(I_{n_o} + G_p\frac{F_I}{s})) = Z(\det(sI_{n_i})\det(I_{n_i} + \frac{F_I}{s}G_p(s))) = Z(\det(sI_{n_c} + F_I G_p(s))) \subset \mathbb{C}_-. \tag{3.3.12}$$

Because of Assumption 3.2.2, we can assume, without loss of generality, that the first n_i rows of $G_p(0)$ are linearly independent. Let

$$G_{p,n_i}(s) \triangleq \begin{bmatrix} g_{1,1}(s) & \cdots & g_{1,n_i}(s) \\ g_{2,1}(s) & \cdots & g_{2,n_i}(s) \\ \cdot & & \cdot \\ \cdot & & \cdot \\ \cdot & & \cdot \\ g_{n_i,1}(s) & \cdots & g_{n_i,n_i}(s) \end{bmatrix} \tag{3.3.13}$$

Then by assumption, $\det G_{p,n_i}(0) \neq 0$. Let $\varepsilon > 0$ be such that $\det G_{p,n_i}(-\varepsilon) \neq 0$ and let

$$F_I = \left[G_{p,n_i}(-\varepsilon)^{-1}\cdot\varepsilon \ , \ 0_{n_i \times (n_o - n_i)}\right] \in \mathbb{R}^{n_i \times n_o}. \tag{3.3.14}$$

Then F_I has maximum rank n_i. The rest of the proof proceeds as for Case I.

■

We can now establish the main result of this chapter.

Theorem 3.3.3: For any integer $m \geq 0$, there exist $m+1$ $n_i \times n_o$ matrices F_j, $0 \leq j \leq m$, with F_m of maximum rank, such that, if $[A_c, B_c, C_c, D_c]$ is a minimal realization of the matrix transfer function $\sum_{j=0}^{m} F_j / s^j$, with state dimension $n_c = m \cdot \min\{n_o, n_i\}$, then the closed-loop system is exponentially stable.

Proof: **Case I:** $n_i \geq n_o$. We prove this theorem by induction. First we note that the theorem is true for $m = 0$ by Theorem 3.3.1. Next, because in the proof of Theorem 3.3.1 the only requirement on D_c is that its components be sufficiently small, there exists a maximum

rank matrix F_0 ($= D_c$) such that $I + G_p(0)F_0$ and $G_p(0)F_0$ are both invertible. This completes the initialization of the induction.

Suppose that $m \geq 1$ and that there exists a minimal stabilizing compensator with the state space matrices $[A_c', B_c', C_c', D_c']$ and transfer function $\sum_{i=0}^{m-1} F_i' / s^i$, where F_{m-1}' has maximum rank and $G_p(0)F_{m-1}'$ is invertible. Referring to Figure 3.1a, we consider this closed loop system as a "new plant" with transfer function $\overline{G}_p(s) \triangleq [(I_{n_o} + G_p(s) \sum_{i=0}^{m-1} F_i' / s^i)^{-1} G_p(s) \sum_{i=0}^{m-1} F_i' / s^i]$. Then $\overline{G}_p(0) = (I_{n_o} + G_p(0)F_0')^{-1} G_p(0)F_0'$ for $m = 1$, and $\overline{G}_p(0) = [G_p(0)F_{m-1}']^{-1}G_p(0)F_{m-1}' = I_{n_o}$ for $m > 1$. In either case, Assumption 3.2.2 is satisfied. According to Theorem 3.3.2, for this new plant, we can find a stabilizing compensator with transfer function of the form F_m' / s, where $F_m' \in \mathbb{R}^{n_o \times n_o}$ of maximum rank. For this compensator, it follows from the proof of Theorem 3.2 that there exists $\alpha_1 > 0$ such that $Z\left[\det(sI_{n_o} + \overline{G}_p(s)F_m')\right] \subset D_{-\alpha_1}$. Expanding $Z\left[\det(sI_{n_o} + \overline{G}_p(s)F_m')\right]$, we obtain that

$$
\begin{aligned}
Z\left[\det(sI_{n_o} + \overline{G}_p(s)F_m')\right] &= Z\left[\det(sI_{n_o} + (I_{n_o}+G_p(s) \sum_{i=0}^{m-1} F_i' / s^i)^{-1}G_p(s)(\sum_{i=0}^{m-1} F_i' / s^i)F_m')\right] \\
&= Z\left[\det[sI_{n_o} + (s^{m-1}I_{n_o}+G_p(s) \sum_{i=0}^{m-1}F_i's^{m-1-i})^{-1}G_p(s)(\sum_{i=0}^{m-1}F_i's^{m-1-i})F_m']\right] \\
&= Z\left[(\det[s^{m-1}I_{n_o} + G_p(s) \sum_{i=0}^{m-1}F_i's^{m-1-i}])^{-1} \det[s^mI_{n_o} + G_p(s)\sum_{i=0}^{m}(F_{i-1}'F_m'+\overline{F}_i)s^{m-i}]\right] \subset D_{-\alpha_1},
\end{aligned}
\tag{3.3.15}
$$

where $F_{-1}' \triangleq 0$, $\overline{F}_i \triangleq F_i'$ for $0 \leq i \leq m-1$ and $\overline{F}_m \triangleq 0$. Let $X(s) \triangleq \det(s^{m-1}I_{n_o} + G_p(s) \sum_{i=0}^{m-1}F_i's^{m-1-i}) = \det(s^{m-1}I_{n_o})\cdot\det(I_{n_o} + G_p(s) \sum_{i=0}^{m-1}F_i's^{-i})$ and let $Y(s) \triangleq \det(s^mI_{n_o} + G_p(s) \sum_{i=0}^{m}(F_{i-1}'F_m'+\overline{F}_i)s^{m-i}) = \det(s^mI_{n_o}) \det(I_{n_o} + G_p(s) \sum_{i=0}^{m}(F_{i-1}'F_m'+\overline{F}_i)s^{-i})$. Note that $X(s)$ and $Y(s)$ are analytical functions on $U_{-\alpha_0}^o$, where α_0 is defined in Assumption 3.2.1.

By assumption, $[A_c', B_c', C_c', D_c']$ is a minimal realization for $\sum_{i=0}^{m-1} F_i' / s^i = (\sum_{i=0}^{m-1} F_i' s^{m-1-i}) \cdot (s^{m-1} I_{n_o})^{-1}$. Since F_{m-1}' has maximum rank, it can be shown that $\sum_{i=0}^{m-1} F_i' s^{m-1-i}$ and $s^{m-1} I_{n_o}$ are coprime. From [Che.1, Chap. 6], it follows that A_c' is a square matrix of dimension $n_c = deg(\det(s^{m-1} I_{n_o})) = (m-1)n_o$. Combining with the assumption that $\sum_{i=0}^{m-1} F_i' / s^i$ is the transfer function of a stabilizing compensator and Proposition 3.2.3, there exists a $\beta > 0$ such that $Z(X) \in D_{-\beta}$. It now follows from (3.3.15) that $Z(Y) \subset D_{-\gamma}$, where $\gamma = \min(\alpha_1, \beta, \alpha_0)$. We now set

$$F_i = F_{i-1}' F_m' + \overline{F}_i \ , \quad 0 \le i \le m \ . \tag{3.3.16a}$$

Then $F_m = F_{m-1}' F_m'$ has maximum rank because F_{m-1}' has maximum rank and F_m' is invertible. Also $G_p(0) F_m = (G_p(0) F_{m-1}') F_m'$ is invertible because $G_p(0) F_{m-1}'$ and F_m' are invertible. Hence we conclude that any minimal realization for the transfer function $\sum_{i=0}^{m} F_i / s^i$ (with state dimension $n_c = mn_o$) is a stabilizing compensator.

Case II: $n_i < n_o$. We proceed again by induction, as for Case I, except that we reason in terms of the configuration shown in Figure 3.1b. Thus we set $\overline{G}_p(s) = (\sum_{i=0}^{m-1} F_i' / s^i)\, G_p(s) [\, I_{n_i} + (\sum_{i=0}^{m-1} F_i' / s^i)\, G_p(s) \,]^{-1}$ and select a stabilizing compensator transfer function F_m'/s with $F_m' \in \mathbb{R}^{n_i \times n_i}$, and we examine the set $Z[\det(sI_{n_i} + F_m' \overline{G}_p(s)]$ (c.f. (3.3.12)). The rest of the proof is then similar to that for Case I, except that we define F_i as follows:

$$F_i = F_m' F_{i-1}' + \overline{F}_i \ , \quad 0 \le i \le m \ . \tag{3.3.16b}$$

If $[A_c, B_c, C_c, D_c]$ is a minimal realization for $\sum_{i=0}^{m} F_i / s^i = (s^m I_{n_i})^{-1} (\sum_{i=0}^{m} F_i s^{m-i})$, the dimension of A_c is $n_c = mn_i$. This completes the proof.

■

Remark 3.3.1: Equations (3.3.6), (3.3.10), (3.3.14), (3.3.16a-b) define a method for finding the coefficient matrices F_i for a stabilizing proportional-plus-multi-integral compensator. In

fact, Theorem 3.3.3 can be restated as follows:

There exist matrices $\{K_i\}_{i=0}^{m} \subset \mathbb{R}^{n_i \times n_o}$, *where* K_m *has maximum rank, such that the plant of (2.2.1) can be stabilized by proportional-plus-multi-integral compensators of the form*

$$\sum_{j=0}^{m} k_j K_j / s^j \ , \ \ 0 < k_j \le k_j^* \ , \ \ 0 \le j \le m \ , \tag{3.3.17}$$

where k_j^**'s are positive real numbers.*

To prove this statement, we first note that, according to the proof of Theorem 3.3.1, we can find a constant matrix F_0 and $k_0^* > 0$ such that for all $D_c = k_0 F_0$ with $0 < k_0 \le k_0^*$, Theorem 3.3.1 is still true. Next, instead of choosing $F_I = G_p(-\varepsilon)^{-1}\varepsilon$ in Case I of the proof of Theorem 3.3.2, we choose

$$F_I \triangleq G_p(0)^{-1}\varepsilon \tag{3.3.18}$$

and note that

$$\begin{aligned} G_p(0)^{-1}\varepsilon &= G_p(-\varepsilon)^{-1}\varepsilon + \varepsilon\int_0^1 \frac{d(G_p(-\varepsilon+t\varepsilon)^{-1})}{dt}dt \\ &= G_p(-\varepsilon)^{-1}\varepsilon - \varepsilon^2\int_0^1 G_p(-\varepsilon+t\varepsilon)^{-2}dt \ . \end{aligned} \tag{3.3.19}$$

The rest of the proof remains the same as that of Theorem 3.3.2 as long as ε is chosen to be small enough. Similar substitutions are then applied to Cases II and III : For $n_o < n_i$, we choose

$$F_I = \begin{bmatrix} G_{p,n_o}(0)^{-1}\ \varepsilon \\ 0_{(n_i-n_o)\times n_o} \end{bmatrix} \in \mathbb{R}^{n_i \times n_o} \ , \tag{3.3.20a}$$

and for $n_o > n_i$, we choose

$$F_I = \left[G_{p,n_i}(0)^{-1}\cdot\varepsilon \ , \ 0_{n_i\times(n_o-n_i)} \right] \in \mathbb{R}^{n_i \times n_o} \ . \tag{3.3.20b}$$

The result then can be induced from (3.3.16a,b).

Furthermore, Theorem 3.3.3 still holds if the transfer function of the compensator is in the form of $\sum_{j=1}^{m} F_j / s^j$, i.e., F_0 is set to 0. The proof is similar to that of Theorem 3.3.3. For this case, we can choose in (3.3.17) that $K_0 = 0_{n_i \times n_o}$ and $K_j = G_p(0)^{-1}$, $\begin{bmatrix} G_{p,n_o}(0)^{-1} \\ 0_{(n_i - n_o)\times n_o} \end{bmatrix}$, or $\left[G_{p,n_i}(0)^{-1} \cdot \varepsilon \ , \ 0_{n_i \times (n_o - n_i)} \right]$ for $1 \le j \le m$ depending on the dimension of the inputs and outputs.[3] This can be easily induced from (3.3.16a-b). The initialization of the induction comes from (3.3.18), (3.3.20a-b). Note that $F_m' = I_{n_o}$ and I_{n_i} for $m \ge 1$ in (3.3.16a) and (3.3.16b) respectively for this case.

■

Referring to [Cal.1], we observe that the proportional-plus-multi-integral compensators we have constructed not only stabilize the feedback system, but also have the following input following and disturbance rejection property:

Proposition 3.3.4: Suppose that $\sum_{j=0}^{m} F_j / s^j$, with $F_m \in \mathbb{R}^{n_i \times n_o}$ of maximum rank and $n_i \ge n_o$, is the transfer function of a proportional-plus-multi-integral stabilizing compensator for the feedback system in Figure 2.1. Then the resulting feedback system can track asymptotically polynomial reference inputs and suppress asymptotically polynomial output disturbances up to order $(m-1)$. ■

3.4 A Numerical Example

Consider the planar bending motion of the flexible cantilever beam introduced in Section 2.3. We assume that a point force actuator and a point displacement sensor at the boundary are used. The differential equation of describing the bending motion is repeated below for convenience:

---

[3] We have made the same assumptions given in the proof of Theorem 3.3.2 here: If $n_i > n_o$, we assume that the first n_o columns of $G_p(0)$ are linearly independent; If $n_i < n_o$, we assume that the first n_i rows of $G_p(0)$ are linearly independent.

$$m\frac{\partial^2 w(t,x)}{\partial t^2} + cI\frac{\partial^5 w(t,x)}{\partial x^4 \partial t} + EI\frac{\partial^4 w(t,x)}{\partial x^4} = 0, \ t \geq 0, \ 0 \leq x \leq 1 , \tag{3.4.1a}$$

with boundary conditions

$$w(t,0) = 0 , \ \frac{\partial w}{\partial x}(t,0) = 0, \tag{3.4.1b}$$

$$M\frac{\partial^2 w}{\partial t^2}(t,1) - cI\frac{\partial^4 w}{\partial x^3 \partial t}(t,1) - EI\frac{\partial^3 w}{\partial x^3}(t,1) = f(t), \tag{3.4.1c}$$

$$J\frac{\partial^3 w}{\partial x \partial t^2}(t,1) + cI\frac{\partial^3 w}{\partial x^2 \partial t}(t,1) + EI\frac{\partial^2 w}{\partial x^2}(t,1) = 0 , \tag{3.4.1d}$$

where $f(\cdot)$ is a control force. The output sensor is modeled by

$$y(t) = w(t, 1) , \ t \geq 0 . \tag{3.4.2}$$

We show in Section 2.3 that the system described by the above equations can be transformed into the form of (2.2.1) with Assumption 2.2.1-3 holding. Since $\alpha = 0$ and the spectrum of A_p is shown as in Figure 2.3, A_{p+} in (2.2.6) is 0 for this example. Therefore $A_p = A_{p-}$ generates an exponentially stable semigroup and Assumption 3.2.1 holds.

We assumed that $m = 2$, $cI = 0.01$, $EI = 1$, $M = 5$, $J = 0.5$. The evaluations of $G_p(s)$ at different values of $s = j\omega$ are discussed in next chapter. For this example, we can obtain a closed-form (but irrational) equation for $G_p(s)$.[4] We find that

$$G_p(0) = 0.333 . \tag{3.4.3}$$

Therefore Assumption 3.2.2 also holds.

First we choose the transfer function of compensator to be

$$G_c(s) = 0.001 * \frac{G_p(0)^{-1}}{s} = \frac{0.003}{s}. \tag{3.4.4}$$

[4] This can be obtained by solving the two-point boundary value differential equation formulated as in the form of (4.5.3), (4.5.4a-c). Note that the coefficients, EI, cI and m, in the differential equations (3.4.1a-d) are constants.

Since minimal realizations of $G_c(s)$ are first order, it follows from (3.3.2) that $\chi(s) = s\det(I_2 + G_p(s)G_c(s))$. The plot of $\chi(j\omega)/d_0(j\omega)$ with $d_0(s) = s + 0.001$ is shown in Figure 3.2. For our design example, the critical frequency interval for the evaluation of $\chi(j\omega)/d_0(j\omega)$ was chosen to be $[10^{-6},200]$; 500 points were used to produce the plots in Figures 3.2, 3.3 and 3.4. Since the zeros of $d_0(s)$ have negative parts, it is obvious from Figure 3.2 and the Argument Principle of complex variable theory [Chu.1] that $Z(\chi(s)) \subset \mathbb{C}_-$ and therefore that the feedback system is exponentially stable (see Theorem 4.2.1).

If we choose the transfer function of the compensator to be

$$G_c(s) = 0.004*\frac{G_p(0)^{-1}}{s} = \frac{0.012}{s}\ , \tag{3.4.5}$$

then the plot of $\chi(j\omega)/d_0(j\omega)$ in Figure 3.3 shows that the feedback system is again exponentially stable.

Alternatively, we can choose the second-order integrator compensator

$$G_c(s) = 0.003*G_p(0)^{-1}*(\frac{1}{s} + \frac{0.001}{s^2}) = 0.009(\frac{1}{s} + \frac{0.001}{s^2})\ . \tag{3.4.6}$$

Since minimal realizations of $G_c(s)$ are second order, it follows from (3.3.2) that $\chi(s) = s^2\det(I_2 + G_p(s)G_c(s))$. We choose $d_0(s) = s^2 + 0.006s + 1.5*10^{-5}$. The plot of $\chi(j\omega)/d_0(j\omega)$ in Figure 3.4 shows that the feedback system is exponentially stable.

3.5 Concluding Remarks

Since it is possible to both stabilize and ensure asymptotic tracking of polynomial inputs and asymptotic rejection of polynomial disturbances by means of very simple finite dimensional compensators, it may be possible to satisfy fairly complex design specifications like robustness and satisfactory transient responses by fairly low dimensional compensators. Such compensators are best designed using nonsmooth optimization techniques as outlined in [Pol.6].

This topic is covered in the next chapter. The proportional-plus-multi-integral compensator design proposed in this chapter can then serve as the initial design for the compensator. For example, we can assume that the transfer function of the minimal compensator is given by

$$\sum_{i=0}^{m} \frac{F_i}{s^i} + \overline{G}_c(s, p_c) \ , \tag{3.5.1}$$

where the components of the matrices F_j, $0 \le j \le m$, and the vector p_c serve as the design variables after we formulate the complex design specifications into the semi-infinite form presented in the next chapter. The initial values of F_j, $0 \le j \le m$, are chosen in the manner described in this chapter and thus allow us to further improve the system performance.

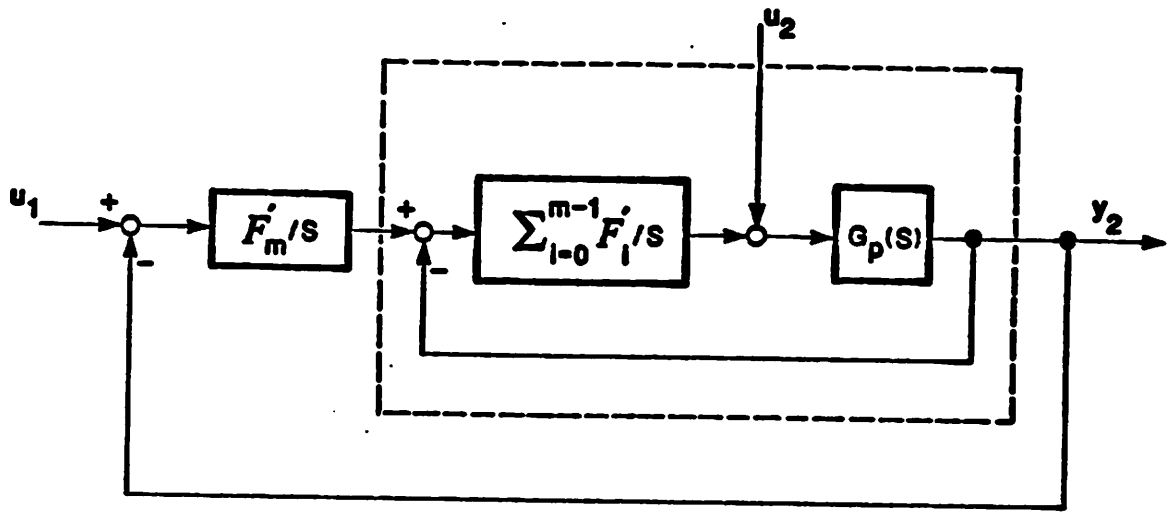

Figure 3.1a: Feedback compensator structure for case I of the proof of Theorem 3.3.3.

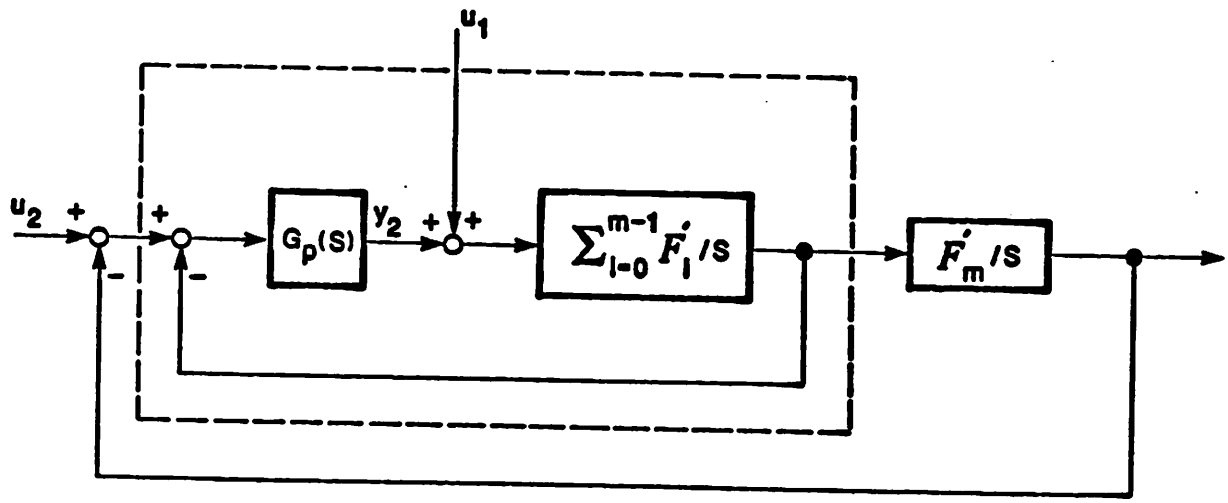

Figure 3.1b: Feedback compensator structure for case II of the proof of Theorem 3.3.3.

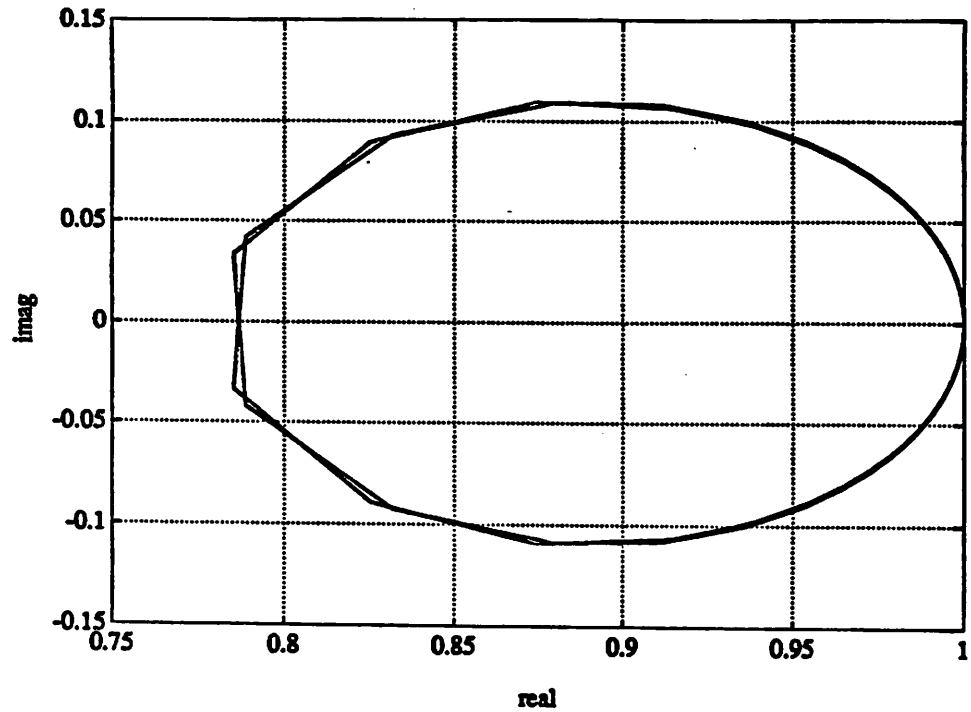

Figure 3.2: Plot of $\chi(j\omega)/d_0(j\omega)$ for the feedback system with the transfer function of the compensator defined in (3.4.4).

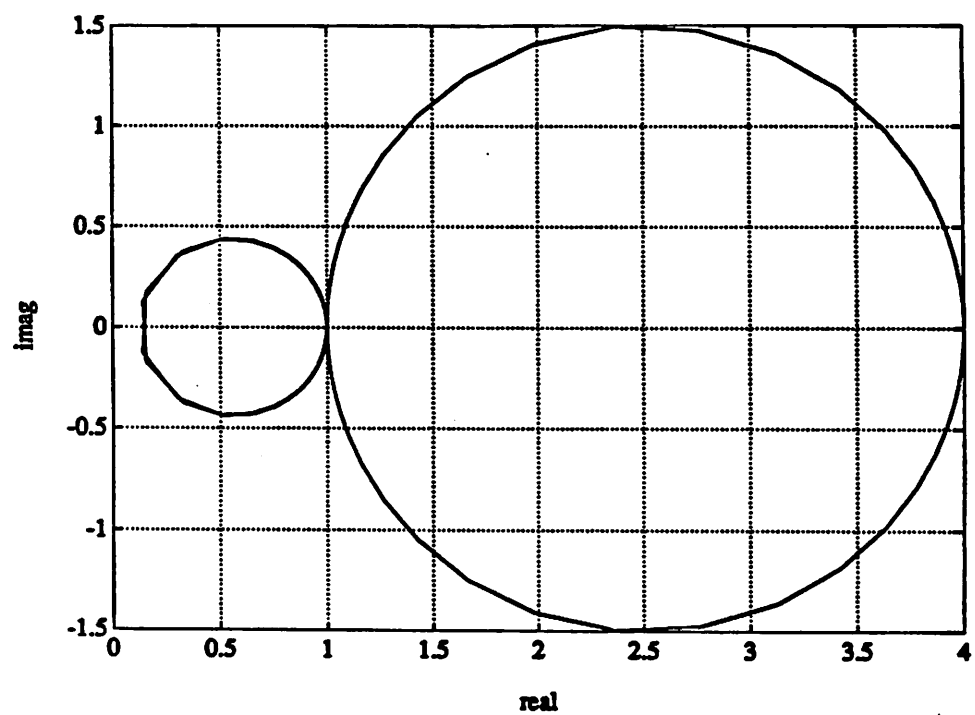

Figure 3.3: Plot of $\chi(j\omega)/d_0(j\omega)$ for the feedback system with the transfer function of the compensator defined in (3.4.5).

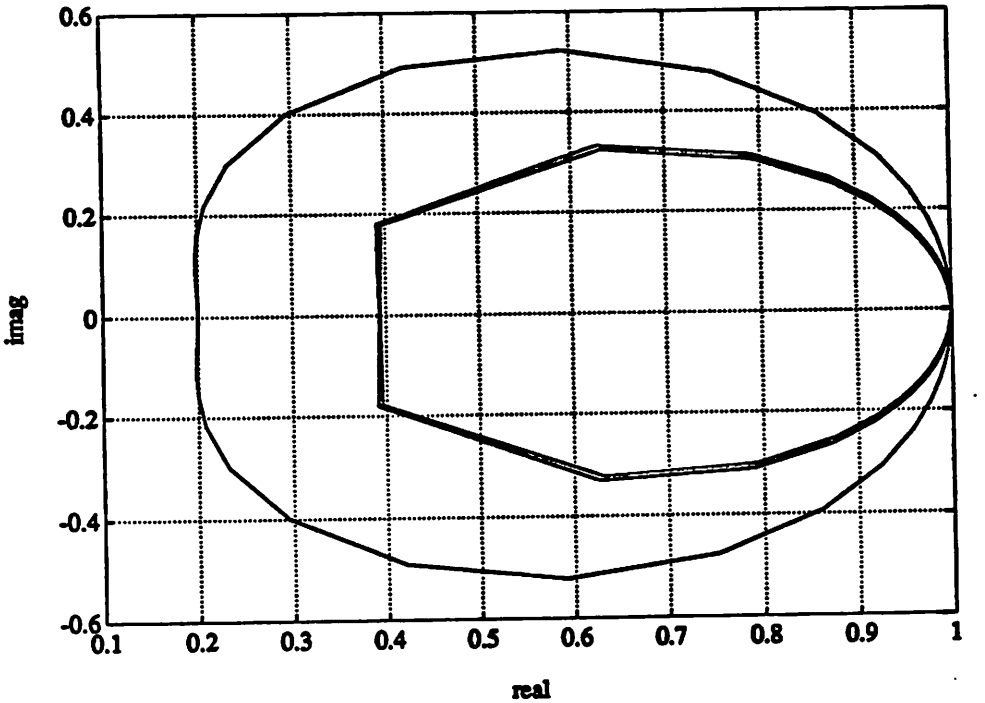

Figure 3.4: Plot of $\chi(j\omega)/d_0(j\omega)$ for the feedback system with the transfer function of the compensator defined in (3.4.6).

CHAPTER 4

OPTIMAL DESIGN OF FEEDBACK COMPENSATORS I: PARAMETRIZED STATE-SPACE FORM

4.1 Introduction

In this chapter, we present a more complex control system design methodology than that considered in Chapter 3. Feedback control is used to achieve various desirable properties, such as exponential stability with a prescribed stability margin, disturbance attenuation, low sensitivity to changes in the plant, specifications of shaped output time responses, etc. We transform the various design specifications mentioned above into a semi-infinite optimization problem. We then model the compensator in the parametrized state-space form, using the elements of the state-space matrices of the compensator as design parameters. Therefore, the order of the compensator can be assigned by the designer in advance.

In Section 4.2, we transform the requirement of exponential stability with a prescribed stability margin into the semi-infinite form. In Section 4.3, we consider the formulation of various frequency- and time-domain performance specifications. In Section 4.4, we discuss the numerical implementation of the semi-infinite optimization problems. In particular, we study the evaluation of the frequency responses of the infinite dimensional plants by considering a case study for the bending motion of a flexible cantilever beam in Section 4.5. A numerical example of designing a stabilizing compensator for the bending motion of a flexible cantilever beam is given in Section 4.6.

We make the following basic assumption:

Assumption 4.1.1: We assume that the matrices, A_c, B_c, C_c, and D_c, are continuously differentiable in the design parameter vector p_c.

■

It is then obvious that $G_c(s, p_c) = C_c(sI - A_c)^{-1}B_c + D_c$ is continuously differentiable in p_c.

4.2 Design of Exponentially Stable Feedback System with a Stability Margin

4.2.1 Introduction

Exponential stability of the closed loop system is the most basic requirement in control system design; it guarantees that the system will not "blow up". Although the Nyquist stability criterion [Nyq.1] has served for many years as the principal "manual" tool for ensuring stability in linear time-invariant systems, it cannot be used in conjunction with computer-aided design techniques based on semi-infinite optimization [Pol.3] because it defines an integer-valued encirclement function, while semi-infinite optimization requires, at a minimum, that constraint and cost functions be locally Lipschitz continuous.

The first attempt to produce a frequency domain stability test for finite dimensional system compatible with the requirements of semi-infinite optimization was presented in [Pol.1]. A significant improvement was presented in [Pol.2]. The necessary and sufficient stability criterion proposed in [Pol.2] is based on the following observation. Suppose that $\chi(s)$ is a characteristic polynomial. Then all the zeros of $\chi(s)$ are in $\mathbb{C}_-$ if and only if there exists a polynomial $d(s)$, of the same degree as $\chi(s)$ and whose zeros are in $\mathbb{C}_-$, such that

$$\mathrm{Re}\,[\chi(j\omega) \,/\, d(j\omega)] > 0, \quad \forall \ \omega \in (-\infty\ ,\ \infty)\ . \tag{4.2.1}$$

The proof of this result is simple. If all the zeros of $\chi(s)$ are in $\mathbb{C}_-$, then set $d(s) = \chi(s)$ and hence (4.2.1) holds. Alternatively, if (4.2.1) holds, then the origin is not encircled by the locus of $\chi(j\omega)/d(j\omega)$, and hence the conclusion holds as for the Nyquist stability criterion. When used in design, the characteristic polynomial is also a differentiable function of compensator designable parameters $p_c \in \mathbb{R}^n$ and has the form $\chi(s, p_c)$; and the normalizing polynomial $d(s)$ is

written in a factored form, such as $d(s, q) = \Pi_{j=1}^{j=p} (s^2 + a_j s + b_j)$, which makes it simple to ensure that the zeros of $d(s)$ are in $\mathbb{C}_-$ (q is a vector whose components are the $a_j's$ and $b_j's$).

In this section we extend the computational stability criterion presented in [Pol.2] to a form that can be used in the design of *finite dimensional* stabilizing compensators for the class of feedback systems with infinite dimensional plants described in Section 2.2. Since in this case the characteristic function defined in (2.4.4) is not a polynomial, there is no simple way to define a normalizing polynomial (of finite degree) for a test of the form (4.2.1), and hence approximation theory has to be applied. The new stability test guarantees the internal stability of the feedback system. Because the numerical implementation of the test does not depend on the use of a reduced plant model, the test will not lead to spill-over effects.

4.2.2 The Computational Stability Test

Consider the feedback system $S(P, K)$ described in Sections 2.2 and 2.4. We first introduce an approximation result.

Proposition 4.2.1: Given $\alpha \geq 0$, any function $f: \mathbb{C} \rightarrow \mathbb{C}$ that is analytic in $U^o_{-\alpha}$, continuous on $\partial U_{-\alpha}$ and converges at infinity in $U_{-\alpha}$, can be approximated uniformly by a rational function that is also analytic on the same domain.

Proof : Let $f(s)$ be a function which is analytic in $U^o_{-\alpha}$, continuous on $\partial U_{-\alpha}$, and converges at infinity in $U_{-\alpha}$. Define the bilinear transformation

$$z \triangleq \frac{s - p + \alpha}{s + p + \alpha} \; ; \; s \triangleq -\alpha + p\frac{1 + z}{1 - z} \; , \tag{4.2.2}$$

and let $g(z) = f(-\alpha + p(1 + z)/(1 - z))$. Since $U_{-\alpha}$ is mapped onto the unit disc, $g(z)$ is analytic in the open unit disc and continuous on the unit circle. By Mergelyan's theorem [Rud.1], $g(z)$ can be uniformly approximated arbitrarily closely on the unit circle by a polynomial in z. Since the transformation (4.2.2) is H^∞-norm preserving, the desired result follows.

■

The characteristic function $\chi(s)$ was defined in (2.4.4) and is repeated here for convenience:

$$\chi(s) \triangleq \det(sI_{n_+} - A_{p+})\det(sI_{n_c} - A_c)\det(I_{n_i} + G_c(s)G_p(s)) \ . \tag{2.4.4}$$

Now we introduce the computational stability criterion.

Theorem 4.2.1: Let n_+ and n_c be the dimensions of the matrices A_{p+} in (2.2.6) and A_c in (2.4.1), respectively. $Z(\chi) \subset D_{-\alpha}$ if and only if there exists an integer $N_n > 0$, and polynomials $d_0(s)$ and $n_0(s)$, of degree $N_d = N_n + n_s$ and N_n, respectively, with $n_s = n_c + n_+$, such that

$$(i)\ \ Z(d_0(s)) \subset D_{-\alpha}\ , \quad Z(n_0(s)) \subset D_{-\alpha}\ ; \qquad (ii)\ \ \mathrm{Re}\left[\frac{\chi(s)n_0(s)}{d_0(s)}\right] > 0 \quad \forall\ s \in \partial U_{-\alpha}\ . \tag{4.2.3}$$

Proof: (i) Suppose that (4.2.3) holds. Since A_{p-} is α-stable, there exists $\varepsilon > 0$ such that $U_{-(\alpha+\varepsilon)}$ is a subset of $\rho(A_{p-})$, and $(sI - A_{p-})^{-1}$ is analytical on $U_{-(\alpha+\varepsilon)}$. From (2.4.9), (2.4.8b), we observe that $\chi(s)$ is an analytic function over $U_{-(\alpha+\varepsilon)}$. Then it follows from the Argument Principle [Chu.1] that $Z(\chi) \subset D_{-\alpha}$.

(ii) Suppose that $Z(\chi) \subset D_{-\alpha}$. We first apply the approximation result given in Proposition 4.2.1 to the function $\chi(s)/(s+\beta)^{n_s}$, where $\beta \geq \alpha$. Clearly, there exists some real number $\gamma_0 > -\alpha$ such that $\lim_{\substack{|s| \to \infty \\ \mathrm{Re}\, s \geq \gamma_0}} G_p(s) \to D_p$ and $\lim_{\substack{|s| \to \infty \\ \mathrm{Re}\, s \geq \gamma_0}} G_c(s) \to D_c$. Because the degree of $\det(sI_{n_+} - A_{p+})\det(sI_{n_c} - A_c)$ is n_s, we obtain

$$\begin{aligned}\lim_{\substack{|s| \to \infty \\ s \in U_{\gamma_0}}} \left|\frac{\chi(s)}{(s+\beta)^{n_s}}\right| &= \lim_{\substack{|s| \to \infty \\ s \in U_{\gamma_0}}} \left|\frac{\det(sI_{n_+} - A_{p+})\det(sI_{n_c} - A_c)}{(s+\beta)^{n_s}}\right| \cdot \lim_{\substack{|s| \to \infty \\ s \in U_{\gamma_0}}} |\det(I_{n_i} + G_c(s)G_p(s))| \\ &= |\det(I_{n_i} + D_c D_p)|.\end{aligned} \tag{4.2.4a}$$

Since $\chi(s)$ is analytic on $U_{-(\alpha+\varepsilon)}$ for some $\varepsilon > 0$, it is uniquely determined by its values over

U_{γ_0} [Chu.1, p.286]. Hence[1]

$$\lim_{\substack{|s|\to\infty \\ s\in U_{-\alpha}}} \left|\frac{\chi(s)}{(s+\beta)^{n_s}}\right| = |\det(I_{n_i} + D_cD_p)| \neq 0 . \tag{4.2.4b}$$

Note that $|\det(I_{n_i} + D_cD_p)|$ is not equal to zero because the feedback system is assumed to be well-posed. Therefore it follows from Proposition 2.4.1 that for any $\delta > 0$, we can find a rational function $d(s)/n(s)$ such that all the zeros of $n(s) \subset D_{-\alpha}$, and

$$\|\chi(s)/(s+\beta)^{n_s} - d(s)/n(s)\| \triangleq \sup_{s\in\partial U_{-\alpha}} |\chi(s)/(s+\beta)^{n_s} - d(s)/n(s)| < \delta . \tag{4.2.5}$$

Since $Z(\chi) \subset D_{-\alpha}$ and for $s \in U_{-\alpha}$, $|\chi(s)| \to \infty$ as $|s| \to \infty$, it is easy to show that $\inf_{s\in U_{-\alpha}} |\chi(s)| = c_0 > 0$. Because of (4.2.4b), for any given $\eta > 0$ sufficiently small, there exists r_η such that $|\chi(s)/(s+\beta)^{n_s}| > |\det(I_{n_i} + D_cD_p)| - \eta$, for all $s \in U_{-\alpha}$ and $|s| \geq r_\eta$. Next we show that if $\delta < \min\{|\det(I_{n_i} + D_cD_p)| - \eta\ ,\ c_0 / (r_\eta + \beta)^{n_s}\}$, then $Z(d(\cdot)) \subset D_{-\alpha}$. If not, then there exists $s_0 \in U_{-\alpha}$ such that $d(s_0) = 0$. Now, by (4.2.5), $|\chi(s_0)/(s_0+\beta)^{n_s} - d(s_0)/n(s_0)| = |\chi(s_0)/(s_0+\beta)^{n_s}| < \delta$. If $|s_0| > r_\eta$, it contradicts $|\chi(s_0)/(s_0+\beta)^{n_s}| > |\det(I_{n_i} + D_cD_p)| - \eta > \delta$, while if $|s_0| \leq r_\eta$, it contradicts $|\chi(s_0)/(s_0+\beta)^{n_s}| > c_0/(r_\eta+\beta)^{n_s} > \delta$.

From (4.2.4b) and because $\inf_{s\in U_{-\alpha}} |\chi(s)| = c_0 > 0$, it is easy to show that $\inf_{s\in\partial U_{-\alpha}} |\chi(s)/(s+\beta)^{n_s}| = l_0 \neq 0$. From (4.2.5), if $\delta < l_0/2$, then for $s \in \partial U_{-\varepsilon}$, $|d(s)/n(s)| > |\chi(s)/(s+\beta)^{n_s}| - \delta > |\chi(s)/(s+\beta)^{n_s}|/2$. Therefore if δ is chosen to be less than $\min\{l_0/2, |\det(I_{n_i} + D_cD_p)| - \eta, c_0/(r_\eta+\beta)^{n_s}\}$, from (4.2.5), we obtain that

$$|\chi(s)/(s+\beta)^{n_s} - d(s)/n(s)| \,/\, |d(s)/n(s)| < \delta \,/\, |d(s)/n(s)| < 2\delta \,/\, |\chi(s)/(s+\beta)^{n_s}| < 1 \ ,\ \ s \in \partial U_{-\alpha} . \tag{4.2.6}$$

---

[1] The following is a sketch of the proof for (4.2.4b). Consider the function $f(s): U_{\gamma_0} \to \mathbb{C}$ such that $f(s) = \chi(s)$ for $s \in U_{\gamma_0}$. By using the transformation defined in (4.2.2), we transform U_{γ_0} in the s plane unto a subset of unit disc in the z plane, which includes the point $z = 1$. Then there exists a unique analytic extension of the function $g(z) = f(-\alpha+p\frac{1+z}{1-z})$ to the unit disk, which is $h(z) = \chi(-\alpha+p\frac{1+z}{1-z})$, $|z| \leq 1$. Therefore (4.2.4b) is just the consequence of $h(1) = g(1)$.

It follows that for all $s \in \partial U_{-\alpha}$, $|[\chi(s)n(s)/(s+\beta)^{n_s}d(s)] - 1| < 1$, and hence that

$$\mathrm{Re}[\frac{\chi(s)n(s)}{(s+\beta)^{n_s}d(s)}] > 0 \ , \ \forall \ s \in \partial U_{-\alpha} \ , \tag{4.2.7}$$

Let $n_0(s) = n(s)$ and $d_0(s) = (s+\beta)^{n_s}d(s)$. This completes our proof. ■

In practice, the test (4.2.3) can only be used as a sufficient condition, because one must choose in advance the degree N_d of the polynomial $d_0(s)$. We now sketch out some of the numerical aspects of using the test (4.2.3) in the design of stabilizing compensators. First, the order n_c of the compensators (2.4.1) must be selected. Second, the polynomials $d_0(s)$ and $n_0(s)$ must be parametrized. In [Pol.2] we find a computationally efficient parametrization for $d_0(s)$ and $n_0(s)$ that is based on the following observation. When $a,b \in \mathbb{R}$, $Z[(s+\alpha)+a)] \subset D_{-\alpha}$ if and only if $a > 0$, and $Z[(s+\alpha)^2 + a(s+\alpha) + b] \subset D_{-\alpha}$ if and only if $a > 0$, $b > 0$. Hence, when the degree of $d_0(s)$ is odd, we set $d_0(s, q_d) \triangleq ((s+\alpha)+a_0)\prod_{i=1}^{m}((s+\alpha)^2 + a_i(s+\alpha) + b_i)$, where $q_d \triangleq (a_0, a_1, a_2, \cdots, a_m, b_1, b_2, \cdots, b_m)^T \in \mathbb{R}^{2m+1}$ and $N_d = 2m+1$. When N_d is even, the linear term is omitted. The polynomial $n_0(s)$, which is of degree $N_n = N_d - n_s$ can be parametrized similarly, with corresponding parameter vector q_n. As a result, if we define

$$\psi^d(q_d) \triangleq \max_{i=1,2,\cdots,N_d} \{\varepsilon - q_d^i\} \ , \tag{4.2.8a}$$

$$\psi^n(q_n) \triangleq \max_{i=1,2,\cdots,N_n} \{\varepsilon - q_n^i\} \ , \tag{4.2.8b}$$

$$\psi^1(p_c, q_d, q_n) \triangleq \sup_{\omega \in [0,\infty)} \{\varepsilon - \mathrm{Re}(\frac{\chi(-\alpha+j\omega, p_c)n_0(-\alpha+j\omega, q_n)}{d_0(-\alpha+j\omega, q_d)})\} \ , \tag{4.2.9}$$

where q_d^i, q_n^i are the components of q_d, q_n, and ε is a small positive number, the test of (4.2.3) becomes

$$\psi^d(q_d) \le 0 \ , \tag{4.2.10a}$$

$$\psi^n(q_n) \le 0 \ , \tag{4.2.10b}$$

$$\psi^1(p_c, q_d, q_n) \le 0 \ . \tag{4.2.11}$$

Note that we have defined ψ^d, ψ^n, ψ^1 in such a way that the test of (4.2.3) is transformed into the min-max forms.

4.3 Design Specifications

As an extension from the finite dimensional case [Wuu.1, Pol.5, Pol.6], we transcribe the various frequency- and time-domain performance specifications into semi-infinite inequality form. These specifications require the shaping of several closed-loop responses. For this purpose, we consider the feedback control system configuration $S(P, K)$ shown in Figure 4.1. Let $y = (e_1, e_2, z_2)^T$ and $u = (u_1, u_2, d_0, d_s)^T$. Let $H(G_p, G_c)$ denote the transfer matrix from u to y. It can be shown that

$$H(G_p, G_c) = \begin{bmatrix} (I + G_pG_c)^{-1} & -(I + G_pG_c)^{-1}G_p & -(I + G_pG_c)^{-1} & -(I + G_pG_c)^{-1} \\ G_c(I + G_pG_c)^{-1} & (I + G_cG_p)^{-1} & -G_c(I + G_pG_c)^{-1} & -G_c(I + G_pG_c)^{-1} \\ G_pG_c(I + G_pG_c)^{-1} & G_p(I + G_cG_p)^{-1} & (I + G_pG_c)^{-1} & -G_pG_c(I + G_pG_c)^{-1} \end{bmatrix} . \tag{4.3.1}$$

(i) *Stability Robustness*:

To begin with, we consider the problem of ensuring closed-loop system stability in the presence of unstructured plant uncertainty. Before we do this, we first define the bounded-input-bounded-output (BIBO) α-stability for the feedback system described by (2.4.2) and find its relationship with the (internal) stability defined in Definition 2.4.1.

Definition 4.3.1: The feedback system $S(P, K)$ formulated by (2.4.2) is said to be BIBO α-stable if there exist $M \in (0, \infty)$ and $\alpha_0 > \alpha$ such that

$$\|Ce^{At}B\| \le Me^{-\alpha_0 t}, \ \forall \ t > 0 \ , \tag{4.3.2}$$

where (A, B, C) is the set of closed-loop state-space operators defined in (2.4.2).

■

Remark 4.3.1: It is clear that if a system is (internally) α-stable, as defined in Definition 2.4.1, it is also BIBO α-stable. If a system is BIBO α-stable, and α-stabilizable and α-detectable, then the system is also (internally) α-stable [Jac.1]. ■

Now we return to the problem of robustness design. Consider the perturbed plant $\tilde{G}_p(s) = (1 + \Delta(s))G_p(s)$ as shown in Figure 4.2, where $\Delta(s)G_p(s)$ converges to 0 at infinity of $U_{-\alpha}$, and $\tilde{G}_p(s)$ and $G_p(s)$ have the same number of poles in $U_{-\alpha}$. Referring to [Che.2], we see that if the nominal design for the plant is BIBO α-stable, then the closed-loop system will remain BIBO α-stable for all perturbed plants $\tilde{G}_p(s) = (1 + \Delta(s))G_p(s)$ with $\Delta(s)$ satisfying

$$\bar{\sigma}[\Delta(-\alpha + j\omega)] < b(\omega), \quad \forall\ \omega \geq 0 \tag{4.3.3}$$

if and only if the nominal feedback system satisfies

$$\bar{\sigma}[H_{3,1}(-\alpha + j\omega)] = \bar{\sigma}[\{G_pG_c(1 + G_pG_c)^{-1}\}(-\alpha + j\omega)] \leq 1/b(\omega)\ , \quad \forall\ \omega \geq 0\ , \tag{4.3.4}$$

where $H_{i,j}(\cdot)$ means the (i, j)-th element of $H(G_p, G_c)$ and $\bar{\sigma}(M)$ denotes the largest singular value of the matrix M. Note that $H_{i,j}(\cdot)$ is itself a matrix function. Hence if we define

$$\begin{aligned} \psi^2(p_c) &\triangleq \sup_{\omega \in [0, \infty]} \{\bar{\sigma}[H_{3,1}(-\alpha + j\omega)] - 1/b(\omega)\} \\ &= \sup_{\omega \in [0, \infty]} \{\bar{\sigma}[\{G_pG_c(1 + G_pG_c)^{-1}\}(-\alpha + j\omega)] - 1/b(\omega)\}\ , \end{aligned} \tag{4.3.5}$$

then for all p_c such that

$$\psi^2(p_c) \leq 0 \tag{4.3.6}$$

holds, the resulting compensator will stabilize not only the nominal plant G_p, but also the plant $(1+\Delta(s))G_p(s)$ with $\Delta(s)$ satisfying (4.3.3).

(ii) *Disturbance Suppression and Good Command Tracking:*

Good input tracking and disturbance rejection over the bandwidth of the feedback system can be achieved by making the norm of the transfer function from the command input u_1 to the tracking error e_1 or equivalently, from d_0 to z_2 (see Figure 4.1) small over the system bandwidth. Hence, if we define the performance function

$$\begin{aligned}\psi^3(p_c) &\triangleq \sup_{\omega \in [0,\infty]} \{\bar{\sigma}[H_{3,3}(j\omega)] - b_d(\omega)\} \\ &= \sup_{\omega \in [0,\infty]} \{\bar{\sigma}[(1 + G_pG_c)^{-1}(j\omega)] - b_d(\omega)\} ,\end{aligned} \tag{4.3.7}$$

where $b_d(\cdot)$ is a continuous bound function, good command tracking and disturbance rejection performance require

$$\psi^3(p_c) \leq 0 . \tag{4.3.8}$$

The extension of Bode's integral theorem states [Boy.2]

$$\int_0^\infty \log\{\bar{\sigma}[H_{3,3}(j\omega)]\} \geq 0 . \tag{4.3.9}$$

Therefore for every frequency interval of nonzero measure over which the feedback system attenuates output disturbances, there must exist an interval of nonzero length over which the system amplifies output disturbances. Hence we must let $b_d(\cdot)$ exceed 1 over some frequency interval outside the system bandwidth $[\omega_1, \omega_2]$. An example of the function $b_d(\cdot)$ is shown in Figure 4.3.

(iii) *Plant Saturation Avoidance:*

Since a large plant input can drive the plant out of the operating region for which the linear model is valid, it is important to keep the plant input small to avoid deterioration of performance and instability. We define the performance function by

$$\psi^4(p_c) \triangleq \sup_{\omega \in [0,\infty]} \{\bar{\sigma}[H_{21}(j\omega)] - b_s\}$$
$$= \sup_{\omega \in [0,\infty]} \{\bar{\sigma}[(G_c(I + G_pG_c)^{-1})(j\omega)] - b_s\} \ , \tag{4.3.10}$$

where $b_s > 0$ is a suitable bound for the plant input power spectrum amplitude. Ignoring the effects of output disturbances or sensor noise, the saturation avoidance requirement can now be formulated as

$$\psi^4(p_c) \leq 0 \ . \tag{4.3.11}$$

(iv) *I/O Map Decoupling:*

In many design problems, it is desirable to have a decoupled (diagonal) I/O (Input/Output) map. Therefore we define

$$\psi^5(p_c) \triangleq \sup_{\substack{\omega \in [0,\infty] \\ 1 \leq i \leq n_i,\ 1 \leq j \leq n_o,\ i \neq j}} \{|[H_{3,1}]^{i,j}(j\omega)| - \varepsilon\}$$
$$= \sup_{\substack{\omega \in [0,\infty] \\ 1 \leq i \leq n_i,\ 1 \leq j \leq n_o,\ i \neq j}} \{|([G_pG_c(1 + G_pG_c)^{-1}]^{i,j})(j\omega)| - \varepsilon\} \ . \tag{4.3.12}$$

where $[H_{3,1}]^{i,j}$ is the scalar transfer function from the input u^j to the output y^i and ε is some small positive number. The I/O map decoupling can be achieved by requiring

$$\psi^5(p_c) \leq 0 \ . \tag{4.2.13}$$

In practical system design, we replace the semi-infinite interval $[0, \infty]$ appeared in the above equations by a critical compact interval. Therefore, all the functions of $\psi's$ defined above and in (4.2.10a-b, 4.2.11) are in the form of

$$\sup_{y \in Y} f(z, y) \ , \tag{4.3.14}$$

where Y is some compact interval and f is a real function which is continuously differentiable in the design parameter vector z. Therefore we have ensured that all the ψ's are at least locally Lipschitz continuous [Pol.3].

(v) *Time-Domain Response:*

In many design problems, time-domain design specifications are essential. In general, because there are no simple relations between time responses and frequency responses, time-domain design specifications cannot be transcribed into frequency-domain specifications.

Suppose we are required to shape the response of the first channel of the plant output to a certain input function in the first input channel denoted by $u_1^1(t)$. For this purpose, we define

$$\begin{aligned}\psi^6(p_c) &\triangleq \max_{t\in[0,t_f]}\left\{L^{-1}\{[H_{3,1}(s)]^{1,1}U_1^1(s)]\}(t) - \underline{b}^1(t)\right\} \\ &= \max_{t\in[0,t_f]}\left\{L^{-1}\{[G_pG_c(I+G_pG_c)^{-1}(s)]^{1,1}U_1^1(s)\}(t) - \underline{b}^1(t)\right\}\end{aligned} \tag{4.3.15}$$

and

$$\psi^7(p_c) = \max_{t\in[0,t_f]}\left\{\overline{b}^1(t) - L^{-1}\{[G_pG_c(I+G_pG_c)^{-1}(s)]^{1,1}U_1^1(s)\}(t)\right\} \tag{4.3.16}$$

where $\underline{b}^1(\cdot)$ and $\overline{b}^1(\cdot)$ are respectively the lower and upper bounds for the first channel of the plant output, L^{-1} is the one-sided inverse Laplace transform, and $U_1^1(s)$ is the Laplace transform of the input $u_1^1(t)$. An example of time-domain step response specification is shown in Figure 4.4. By requiring that

$$\psi^6(p_c) \le 0 \tag{4.3.17}$$

and

$$\psi^7(p_c) \le 0\ , \tag{4.3.18}$$

satisfactory time-domain responses can be achieved.

We prove that $\psi^6(\cdot)$ and $\psi^7(\cdot)$ are Lipschitz continuous in Appendix 4.A under the assumption that $\overline{\sigma}[G_p(s)]U_1^1(s) = O(s^{-2})$.

We refer the reader to [Pol.5, Pol.6, Wuu.1] for more examples of design specifications.

4.4 Formulation of The Semi-Infinite Optimization Problem

Exponential stability of the feedback system must be guaranteed before we attempt to satisfy other design specifications. Otherwise, some closed-loop transfer functions which are used for shaped feedback system specifications may have unstable poles. Problems of numerical instability may arise when the unstable poles of the feedback system cross over the $j\omega$-axis (or the boundary of instability region, $\partial U_{-\alpha}$) during the design process. Therefore the first step in feedback system design is to make sure that (4.2.10a,b) and (4.2.11) are satisfied.

Next, we try to satisfy the various design requirements mentioned above by finding an element of the *feasible set, F*, defined by

$$F = \{z \in \mathbb{R}^{m_z} \mid \psi^k(z) \leq 0 \ , \ k \in I_0\}, \tag{4.4.1}$$

where $z \triangleq (p_c, q_d, q_n)$ is the vector of the design parameters, m_z is the dimension of z, $I_0 = \{1, 2, \cdots, k_0\}$, and k_0 is the number of the design requirements. Once we obtain an element in the feasible set F, we can tighten the performance requirements by replacing $\psi^k \leq 0$ with $\psi^k + b \leq 0$ for some $b > 0$. We can also add new performance functions to the set $\{\psi^k, k \in I_0\}$. Alternatively, we can solve a problem of the type

$$\min_{z \in \mathbb{R}^{m_z}} \{\psi^0(z) \mid \psi^k(z) \leq 0 \ , \ k \in I_0\} \ . \tag{4.4.2}$$

Then we can minimize a given performance function ψ^0 without degrading other performance figures. Essentially, we formulate "negotiable" requirements as a cost function that we want to optimize and put "non-negotiable" specifications into the form of semi-infinite inequality constraints. Once the cost performance function is adequate, we can reformulate (4.4.2) by transforming the cost performance function into a constraint and adding a new cost perfor-

mance function.

In (4.4.1-2), each ψ^k: $\mathbb{R}^{m_z} \rightarrow \mathbb{R}$ is at least Lipschitz continuous in z. This guarantees the existence of gradients or generalized gradients of these functions. The solutions of the optimization problems given in (4.4.1) and (4.4.2) are made possible by new semi-infinite programming algorithms for the constrained minimization of regular, uniformly locally Lipschitz continuous functions in $\mathbb{R}^N$ [Pol.3]. This approach has been applied to solve problems in finite dimensional control system design [Pol.6, Wuu.1]. Even though we are dealing with infinite dimensional systems, the dimension of the design parameters is finite, and, the numerical techniques developed in the finite dimensional case can therefore be borrowed to solve the optimization problems formulated in (4.4.1) and (4.4.2). However, two numerical problems arise for infinite dimensional feedback systems.

The first problem concerns the implementation of the inverse Laplace transform for the time-domain design specifications. For the finite dimensional case, the inverse Laplace transform can be implemented by the simulation of an ordinary differential equation. Such simulations are usually performed by repeated computations of the exponential of a matrix [Wuu.1]. We take the example of the bending motion of the cantilever beam introduced in Section 2.3 to explain the implementation of the inverse Laplace transform for the infinite dimensional case. If we borrow the idea from the finite dimensional case, the implementation of the inverse Laplace transform involves the simulation of a partial differential equation. The simulations will give us the values of the vibration in terms of the time and the space variables and are usually very time-consuming. Because we are only interested in the values of the vibration in time-domain at the spatial points where the sensors are located, the values of the vibration on the other points of the beam are irrelevant. A similar problem has been considered to determine response histories at isolated stations in linear viscoelastic media that have

been subjected to impact [Sac.1, Sac.2]. For this reason, we suggest to use the Fast Fourier Transform (FFT) Algorithm to perform the inverse Laplace transform instead of using the simulation of a partial differential equation. Reliable FFT software packages are available. However, this approach requires prior information about the bandwidth of the relevant transfer functions to avoid big aliasing errors [Opp.1] .

The second problem we face is the evaluation of the transfer function $G_p(s)$ of the infinite dimensional plant, which is discussed in the next section.

4.5 Evaluation of Frequency Response of the Bending Motion of A Cantilever Beam: A Case Study

A truly efficient method for evaluating $G_p(s)$ for many values of $s \in \mathbb{C}$ remains to be developed, particularly for cases in which some design parameters are plant parameters, as in integrated system design. In this section, we consider a case study for the planar bending motion of a flexible cantilever beam. For simple cases like that discussed in Section 2.3, we can obtain a closed-form formula for $G_p(s)$. However, for the general case, it is impossible to obtain a closed-form formula for $G_p(s)$, and instead we have to compute $G_p(s)$ by solving a two-point boundary value problem. For example, consider a general formulation for the planar bending motion of a flexible beam shown in Figure 2.2, which is given below:[1]

$$m(x)\ddot{w}(x, t) + \frac{d^2}{dx^2}[c(x)I(x)\frac{d^2}{dx^2}\dot{w}(x, t)] + \frac{d^2}{dx^2}[E(x)I(x)\frac{d^2}{dx^2}w(x, t)] = \sum_{j=1}^{n_i} r^j(x)f^j(t), \qquad (4.5.1a)$$

with the boundary conditions:

$$w(0, t) = \frac{dw}{dx}(0, t) = 0, \qquad (4.5.1b)$$

[1] If we want to apply the design methodology proposed in this thesis to the system described by (4.5.1a-d), (4.5.2a-b), we have to prove that it can be transformed into the standard model (2.2.1) with Assumptions 2.3.1-3 holding. That proof is not discussed in this thesis.

$$J\frac{d\ddot{w}}{dx}(1,t) + c(1)I(1)\frac{d^2\dot{w}}{dx^2}(1,t) + E(1)I(1)\frac{d^2w}{dx^2}(1,t) = 0, \tag{4.5.1c}$$

$$M\ddot{w}(1,t) - \frac{d}{dx}[c(x)I(x)\frac{d^2\dot{w}(x,t)}{dx^2}]\,|_{x=1} - \frac{d}{dx}[E(x)I(x)\frac{d^2w(x,t)}{dx^2}]\,|_{x=1} = 0. \tag{4.5.1d}$$

where $r^j(x)$ is the influence function of the jth actuator, and n_i is the number of the point actuators. Depending on whether the sensor is a point displacement sensor or a point angle-of-rotation sensor, we formulate the output of the bending motion of the cantilever beam by

$$y^i(t) = w(z^i, t), \tag{4.5.2a}$$

or

$$y^i(t) = w'(z^i, t), \tag{4.5.2b}$$

where $1 \le i \le n_o$, n_o is the number of the sensors, z^i is the location of the i-th sensor and "$'$" denotes the derivative with respect to the spatial variable x. To obtain the (i,j)-th component of the transfer function, we take the Laplace transform with respect to time for (4.5.1a-d), and set $f^k(t) = 0, \forall\ k \ne j$. Let $T_j(x, s)$ be the ratio of the Laplace transforms of $w(x, t)$ and $f^j(t)$. We obtain the following boundary value differential problem for $T_j(\cdot, s)$:

$$\frac{d^2}{dx^2}\{(E(x)I(x) + sc(x)I(x))\frac{d^2}{dx^2}T_j(x,s)\} + m(x)s^2T_j(x,s) = r^j(x), \quad 0 \le x \le 1, \tag{4.5.3}$$

with the boundary conditions:

$$T_j(0,s) = \frac{dT_j}{dx}(0,s) = 0, \tag{4.5.4a}$$

$$[E(1)I(1) + sc(1)I(1)]\frac{d^2T_j}{dx^2}(1,s) + Js^2\frac{dT_j}{dx}(1,s) = 0, \tag{4.5.4b}$$

$$\frac{d}{dx}\{(E(x)I(x) + sc(x)I(x))\frac{d^2T_j(x,s)}{dx^2}\}\Big|_{x=1} = Ms^2T_j(1,s)\ . \tag{4.5.4c}$$

The (i,j)th component of the transfer function $G_p(s)$, $g_p^{i,j}(s)$, is then equal to

$$g_p^{i,j}(s) = T_j(z^i, s) \ , \tag{4.5.5a}$$

and

$$g_p^{i,j}(s) = T'_j(z^i, s) \ . \tag{4.5.5b}$$

respectively for the point displacement sensor and the point angle-of-rotation sensor. Since $r^j(\cdot)$ in (4.5.3) may be a delta function or a derivative of a delta function, we would like to integrate (4.5.3) twice from 1 to x. Then combining the result with (4.5.4b,c), we get

$$(E(x)I(x) + sc(x)I(x))\frac{d^2}{dx^2}T_j(x,s) + M(1-x)s^2T_j(1,s) + Js^2T'_j(1,s) + s^2\int_1^x d\tau_2\int_1^{\tau_2} m(\tau_1)T_j(\tau_1,s)d\tau_1 = \int_1^x d\tau_2\int_1^{\tau_2} r^j(\tau_1)d\tau_1 \ , \tag{4.5.6}$$

We define $W_j(x,s) \triangleq \int_1^x d\tau_2\int_1^{\tau_2} m(\tau_1)T_j(\tau_1,s)d\tau_1$ which is equivalent to

$$\frac{d^2W_j}{dx^2}(x,s) = m(x)T_j(x,s) \ , \tag{4.5.7a}$$

with the boundary conditions

$$W_j(1,s) = W'_j(1,s) = 0 \ . \tag{4.5.7b}$$

Let $Y_j(x, s) \triangleq (T_j(x, s), T'_j(x, s), W_j(x, s), W'_j(x, s))^T$. Then (4.5.6), (4.5.7a,b) can be rewritten in the following form:

$$\frac{dY_j(x, s)}{dx} = A(x, s)Y_j(x, s) + b_2(x, s)T_j(1, s) + b_3(x, s)T'_j(1,s) + b_4(x, s) \ .$$

$$\triangleq \begin{bmatrix} 0 & 1 & 0 & 0 \\ 0 & 0 & \dfrac{-s^2}{E(x)I(x)+sC(x)I(x)} & 0 \\ 0 & 0 & 0 & 1 \\ m(x) & 0 & 0 & 0 \end{bmatrix} Y_j(x, s) + \begin{bmatrix} 0 \\ \dfrac{-(1-x)Ms^2}{E(x)I(x)+sC(x)I(x)} \\ 0 \\ 0 \end{bmatrix} T_j(1,s)$$

$$+ \begin{bmatrix} 0 \\ \dfrac{-Js^2}{E(x)I(x)+sC(x)I(x)} \\ 0 \\ 0 \end{bmatrix} T_j'(1,s) + \begin{bmatrix} 0 \\ \dfrac{g(x)}{E(x)I(x)+sC(x)I(x)} \\ 0 \\ 0 \end{bmatrix} \tag{4.5.8}$$

where $g(x) \triangleq \int_1^x d\tau_2 \int_1^{\tau_2} r^j(\tau_1)d\tau_1$. If $r^j(x) = \delta(x - x^j)$ where x^j is the location of the actuator,

$$g(x) = \begin{cases} x^j - x & \text{if } x^j \geq x\ , \\ 0 & \text{otherwise}\ . \end{cases} \tag{4.5.9a}$$

If $r^j(x) = -\delta'(x - x^j)$,

$$g(x) = \begin{cases} 1 & \text{if } x^j \geq x\ , \\ 0 & \text{otherwise}\ . \end{cases} \tag{4.5.9b}$$

From (4.5.4a), (4.5.7b), the boundary conditions of (4.5.8) can be expressed by

$$\begin{bmatrix} 1 & 0 & 0 & 0 \\ 0 & 1 & 0 & 0 \end{bmatrix} Y_j(0, s) = \begin{bmatrix} 0 \\ 0 \end{bmatrix}, \quad \begin{bmatrix} 0 & 0 & 1 & 0 \\ 0 & 0 & 0 & 1 \end{bmatrix} Y_j(1, s) = \begin{bmatrix} 0 \\ 0 \end{bmatrix}. \tag{4.5.10}$$

The above linear boundary value problem can be solved using a shooting method. Let $h_0(x, s)$ and $h_1(x, s)$ denote the homogeneous solutions of (4.5.8) with initial conditions $(0, 0, 1, 0)^T$ and $(0, 0, 0, 1)^T$ respectively, i.e., $dh_i(x, s)/dx = A(x, s)h_i(x, s)$, $i = 0,1$, $h_0(0, s) = (0, 0, 1, 0)^T$ and $h_1(0, s) = (0, 0, 0, 1)^T$. Let $h_2(x, s)$ and $h_3(x, s)$ denote the solutions of $dY_j/dx = AY_j + b_2$ and $dY_j/dx = AY_j + b_3$ respectively with zero initial conditions. Finally let $h_4(x, s)$ denote the solution of $dY_j/dx = AY_j + b_4$ with zero initial condition. Then the solution of (4.5.8) can be expressed as

$$Y_j(x, s) = c_0(s)h_0(x, s) + c_1(s)h_1(x, s) + T_j(1, s)h_2(x, s) + T_j'(1, s)h_3(x, s) + h_4(x, s). \quad (4.5.11)$$

The constants $c_0(s)$, $c_1(s)$, $T_j(1, s)$ and $T_j'(1, s)$ can be determined by the following linear equation:

$$\begin{aligned}
&c_0(s)h_0^1(1, s) + c_1(s)h_1^1(1, s) + T_j(1, s)h_2^1(1, s) + T_j'(1, s)h_3^1(1, s) + h_4^1(1, s) = T_j(1, s)\\
&c_0(s)h_0^2(1, s) + c_1(s)h_1^2(1, s) + T_j(1, s)h_2^2(1, s) + T_j'(1, s)h_3^2(1, s) + h_4^2(1, s) = T_j'(1, s)\\
&c_0(s)h_0^3(1, s) + c_1(s)h_1^3(1, s) + T_j(1, s)h_2^3(1, s) + T_j'(1, s)h_3^3(1, s) + h_4^3(1, s) = 0\\
&c_0(s)h_0^4(1, s) + c_1(s)h_1^4(1, s) + T_j(1, s)h_2^4(1, s) + T_j'(1, s)h_3^4(1, s) + h_4^4(1, s) = 0,
\end{aligned} \quad (4.5.12)$$

which is equivalent to the following matrix form,

$$\begin{bmatrix} h_0^1(1, s) & h_1^1(1, s) & h_2^1(1, s) - 1 & h_3^1(1, s) \\ h_0^2(1, s) & h_1^2(1, s) & h_2^2(1, s) & h_3^2(1, s) - 1 \\ h_0^3(1, s) & h_1^3(1, s) & h_2^3(1, s) & h_3^3(1, s) \\ h_0^4(1, s) & h_1^4(1, s) & h_2^4(1, s) & h_3^4(1, s) \end{bmatrix} \begin{bmatrix} c_0(s) \\ c_1(s) \\ T_j(1, s) \\ T_j'(1, s) \end{bmatrix} = \begin{bmatrix} -h_4^1(1, s) \\ -h_4^2(1, s) \\ -h_4^3(1, s) \\ -h_4^4(1, s) \end{bmatrix} \quad (4.5.13)$$

where $h_j^i(s)$ means the ith component of the vector $h_j(s)$. Equations (4.5.5a,b) then become

$$g_p^{ij}(s) = Y_j^1(z^i, s) \quad (4.5.14a)$$

and

$$g_p^{ij}(s) = Y_j^2(z^i, s), \quad (4.5.14b)$$

where $Y_j^i(x, s)$ denotes the ith component of $Y_j(x, s)$.

In Table 4.1, we compare the evaluations of the frequency response of the system described in (4.5.1a-d) and (4.5.2a-b) by using the shooting method and an analytical closed-form solution. In our numerical simulations, we assumed that the coefficients in (4.5.1a) are constants. We choose $m = 2$, $cI = 0.01$, $EI = 1$, $M = 5$ and $J = 0.5$. A point force actuator and a point angle of rotation sensor are used and colocated at $x = 1$. The shooting method gives quite accurate results. The CPU time that it requires is six times that required by the closed-form evaluation.

Table 4.1: Evaluation of Frequency Responses

Frequency Points	*Closed-Form Solution*	*Shooting Method*
1.000000e-02	3.334066e-01 +i -3.334800e-05	3.334063e-01 +i -3.334796e-05
2.511886e-02	3.337964e-01 +i -8.396236e-05	3.337961e-01 +i -8.396227e-05
6.309573e-02	3.362770e-01 +i -2.140504e-04	3.362767e-01 +i -2.140502e-04
1.584893e-01	3.528282e-01 +i -5.919151e-04	3.528278e-01 +i -5.919145e-04
3.981072e-01	5.123786e-01 +i -3.138715e-03	5.123778e-01 +i -3.138709e-03
1.000000e+00	-2.682607e-01 +i -2.267297e-03	-2.682609e-01 +i -2.267304e-03
2.511886e+00	-1.580077e-02 +i -8.705360e-04	-1.580077e-02 +i -8.705344e-04
6.309573e+00	-4.560727e-03 +i -2.129576e-05	-4.560733e-03 +i -2.129572e-05
1.584893e+01	-5.937243e-04 +i -1.936779e-04	-5.937077e-04 +i -1.936427e-04
3.981072e+01	-1.155983e-04 +i -5.730677e-06	-1.155982e-04 +i -5.729772e-06

As we have shown, the shooting method reduces the linear boundary-value problems to a set of linear initial-value problems. Various other methods can be used to solve the linear boundary differential equation (4.5.8), such as finite difference method [Asc.1] or the factorization method [Tau.1]. However, we prefer the shooting method for the following reasons: (i) it can be easily generalized to solve multi-point boundary-value problems that come from the multi-link flexible structures; (ii) it is well suited to the evaluation of the frequency responses for the multi-input-multi-output systems because we only have to calculate the functions $h_0(\cdot)$, $h_1(\cdot)$, $h_2(\cdot)$ and $h_3(\cdot)$ in (4.5.11) once, and we just perform more evaluations like (4.5.14a,b) for additional output sensors. For the example mentioned above, if we evaluate the frequency response for the two-input-two-output case, the time taken by using shooting method is 2.6 times that taken by using the closed-form evaluation, compared with 6 times for the single-input-single-output case. (iii) it follows from (4.5.11) and (4.5.14a,b) that only the values of $h_i(x, s)$ for $0 \le i \le 4$ at $x = 1$ and $x = z^j$ for $1 \le j \le n_o$ must be stored in memory.

4.6 A Numerical Example

This section describes the numerical process in designing a fourth order compensator for a single-input-single-output feedback system with the plant described by (2.3.1a-d) and (2.3.2a,b) in Section 2.3. We assume that $m = 2$, $cI = 0.01$, $EI = 1$, $M = 5$, $J = 0.5$, that the required stability margin $\alpha = 0.2$, and that the point force actuator and the point displacement sensor are colocated at $x = 1$.

To obtain an initial compensator design and to provide a testbed for the study of truncation effects, we first solve (2.3.28) to derive the first four natural frequencies and the corresponding mode shapes of undamped oscillations as follows:

$$\omega_1^2 = 0.451,\ \eta_1(x) = -0.0289exp(a_1x)-0.792exp(-a_1x)-0.763sin(a_1x)+0.821cos(a_1x),\ a_1 = 0.975; \tag{4.6.1a}$$

$$\omega_2^2 = 8.936,\ \eta_2(x) = 0.117exp(a_2x)-0.737exp(-a_2x)-0.854sin(a_2x)+0.620cos(a_2x),\ a_2 = 2.06; \tag{4.6.1b}$$

$$\omega_3^2 = 274.36,\ \eta_3(x) = -0.00735exp(a_3x)-0.975exp(-a_3x)-0.967sin(a_3x)+0.982cos(a_3x),\ a_3 = 4.84; \tag{4.6.1c}$$

$$\omega_4^2 = -1956.89,\ \eta_4(x) = 0.000351exp(a_4x)-0.996exp(-a_4x)-0.996sin(a_4x)+0.9956cos(a_4x),\ a_4 = 7.91\ . \tag{4.6.1d}$$

We then carry out a modal expansion of the plant dynamics to obtain the first eight modes: $-0.0023 \pm 0.6716j$, $-0.0447 \pm 2.9890j$, $-1.3718 \pm 16.5069j$, $-9.7845 \pm 43.1411j$. In the corresponding truncated state space plant model, the matrix A_p has the form $A_p = diag(A_{11}, A_{22}, A_{33}, A_{44})$, where

$$A_{11} = \begin{bmatrix} 0 & 1 \\ -0.451053 & -0.004511 \end{bmatrix} \quad A_{22} = \begin{bmatrix} 0 & 1 \\ -8.936154 & -0.089362 \end{bmatrix},$$
$$A_{33} = \begin{bmatrix} 0 & 1 \\ -274.359603 & -2.743596 \end{bmatrix} \quad A_{44} = \begin{bmatrix} 0 & 1 \\ -1956.894214 & -19.568942 \end{bmatrix}. \tag{4.6.2}$$

Also we obtain

$$B_p = (0,\ -0.272993,\ 0,\ -0.112681,\ 0,\ 0.073277,\ 0,\ -0.047885)^T, \tag{4.6.3}$$

$$C_p = (-0.545986,\ 0,\ -0.225362,\ 0,\ 0.146553,\ 0,\ -0.095770,\ 0), \tag{4.6.4}$$

and $D_p = 0$. It is straightforward to check that the unstable modes are controllable and observable. We choose to design the compensator in transfer function form: $G_c(p_c,s) = c_0(c_1s^2 + c_2s + 1)(c_3s^2 + c_4s + 1)/(d_1s^2 + d_2s + 1)(d_3s^2 + d_4s + 1)$, which results in $p_c = (c_o,c_1,c_2,c_3,c_4,d_1,d_2,d_3,d_4)^T$. We set $n_0(s) = 1$ and $d_0(s, q_d) = \prod_{i=1}^{4} ((s + \alpha)^2 + a_i^2(s + \alpha) + b_i^2)$, so that $q_d \triangleq (a_1,a_2,a_3,a_4,b_1,b_2,b_3,b_4)^T$. We set $\varepsilon = 0$ in (4.2.8a,b, 4.2.9).

Using pole assignment on the fourth order truncated model, we obtain the initial compensator transfer function: $G_c(p_c,s) = \dfrac{21044.8s^3 + 96356.5s^2 + 88286.1s + 858018}{s^4 + 2.94613s^3 + 177.301s^2 - 3333.83s - 7930.13}$, which stabilizes the truncated model. However, it fails to stabilize the truncated plant of orders 6 and 8 as well as the full precision model.

Using this compensator as the starting point for our semi-infinite optimization algorithm and choosing $q_d = (0.8945, 0.6322, 0.4001, 0.2828, 10.008, 7.0027, 5.0006, 3.0003)$, we obtain in two iterations of a semi-infinite minimax algorithm the following transfer function of the stabilizing compensator for our controlled flexible structure: $G_c(p_c,s) = \dfrac{-12.5806s^4 + 20658.8s^3 + 94255.7s^2 + 87402.1s + 841483}{s^4 + 2.12762s^3 + 171.79s^2 - 3262.91s - 7774.42}$. The new $q_d = (0.8945, 0.6324, 0.3998, 0.2828, 10.008, 7.0030, 5.0016, 2.9997)$. The critical frequency interval for the evaluation of $\chi(p_c,s)/d_0(s, q_d)$ is [0.1 , 200] and the number of sampling points used is 50; 500 points are used to produce the plots in Figures 4.5 and 4.6 The plot corresponding to $\chi(p_c,s)/d_0(s,q_d)$ for the initial value of the compensator is shown in Figure 4.5 and the plot for the final value in Figure 4.6.

It is interesting to observe that the closed-loop system poles which result from the use of this stabilizing compensator and the truncated plant of order 4 are $0.695414 \pm j9.82352$, $-1.4397 \pm j7.04732$, $-0.128045 \pm j4.91775$, $-0.238414 \pm j2.99904$. As we can see, there are two unstable poles. However, when the plant model is truncated to orders 6 and 8, respectively, the closed-loop system is stable and has poles at $-0.521081 \pm j16.3213$, $-1.02523 \pm j9.92591$, $-0.459227 \pm j7.0698$, $-0.23843 \pm j4.9936$, $-0.238574 \pm j2.99953$; and $-9.75924 \pm j43.1321$, $-0.51818 \pm j16.3271$, $-1.09369 \pm j9.94782$, $-0.411156 \pm j7.04619$, $-0.246175 \pm j4.99733$, $-0.238581 \pm j2.99956$, respectively.

4.7 Concluding Remarks

In this chapter, we have transformed design requirements, including exponential stability with a certain stability margin and various frequency- and time-domain feedback-loop specifications, into a semi-infinite programming form and discussed the problems of numerical implementation. The design parameters are the elements of the state-space matrices of the compensator, and the order of the compensator can be assigned by the designer. We have given a numerical example in which a finite dimensional compensator was designed to stabilize the bending motion of a flexible cantilever beam with a specified stability margin. One drawback of the design approach proposed in this chapter is that it leads to semi-infinite optimization problems that have local minima. In the next chapter, we will use Q-parametrization for the compensators that will lead to convex optimization problems and hence avoid the problem of local minima.

Appendix 4.A

Proposition 4.A.1: If we assume that $\overline{\sigma}[G_p(s)]U_1^1(s) = O(s^{-2})$, then ψ^6 and ψ^7 are Lipschitz continuous in p_c.

Proof: Since the proof for $\psi^7(\cdot)$ is the same as that for $\psi^6(\cdot)$, we only consider the case of $\psi^6(\cdot)$.

Let $G_c^1 \triangleq G_c(p_c^1)$ and $G_c^2 \triangleq G_c(p_c^2)$. [1] Consider

$$
\begin{aligned}
&|\psi^6(p_c^2) - \psi^6(p_c^1)| \\
&= \Big| \max_{t \in [0,t_f]} \left\{ L^{-1}\{[G_pG_c^2(I + G_pG_c^2)^{-1}(s)]^{1,1}U_1^1(s)\}(t) - \underline{b}^1(t) \right\} \\
&\qquad - \max_{t \in [0,t_f]} \left\{ L^{-1}\{[G_pG_c^1(I + G_pG_c^1)^{-1}(s)]^{1,1}U_1^1(s)\}(t) - \underline{b}^1(t) \right\} \Big| \qquad (4.A.1) \\
&\le \max_{t \in [0,t_f]} \Big| \left(L^{-1}\{[G_pG_c^2(I + G_pG_c^2)^{-1}(s)]^{1,1}U_1^1(s)\}(t) - \underline{b}^1(t)\right) \\
&\qquad - \left(L^{-1}\{[G_pG_c^1(I + G_pG_c^1)^{-1}(s)]^{1,1}U_1^1(s)\}(t) - \underline{b}^1(t)\right) \Big| \qquad (4.A.2) \\
&\le \max_{t \in [0,t_f]} \Big| L^{-1}\{[(I + G_pG_c^1)^{-1}G_p(G_c^2 - G_c^1)(I + G_pG_c^2)^{-1}]^{1,1}U_1^1(s)\}(t) \Big| \qquad (4.A.3) \\
&= \max_{t \in [0,t_f]} \Big| \frac{1}{2\pi j} \int_{c_0 - j\infty}^{c_0 + j\infty} \{[(I + G_pG_c^1)^{-1}G_p(G_c^2 - G_c^1)(I + G_pG_c^2)^{-1}]^{1,1}U_1^1(s)\} e^{st} ds \Big| \qquad (4.A.4) \\
&= \max_{t \in [0,t_f]} \Big| \frac{1}{2\pi j} \int_{c_0 - j\infty}^{c_0 + j\infty} \{[(I + G_pG_c^1)^{-1}G_p(\int_0^1 \langle G_c'(p_c^1 + \tau(p_c^2 - p_c^1)), p_c^2 - p_c^1\rangle d\tau) \\
&\qquad (I + G_pG_c^2)^{-1}]^{1,1}U_1^1(s)\} e^{st} ds \Big| \qquad (4.A.5)
\end{aligned}
$$

[1] It should be clear that G_c (and other transfer functions) are functions of the Laplace parameter s which will often be omitted for simplicity of notation.

$$\leq |p_c^2 - p_c^1|_2 \max_{t \in [0,t_f]} e^{c_0 t} \left| \left\{ \frac{1}{2\pi} \int_{c_0 - j\infty}^{c_0 + j\infty} \bar{\sigma}[(I + G_p G_c^1)^{-1}](s)\, \bar{\sigma}[G_p(s)] \int_0^1 \bar{\sigma}[G_c'(p_c^1 + \tau(p_c^2 - p_c^1))] d\tau \right.\right.$$

$$\left.\left. \bar{\sigma}[(I + G_p G_c^2)^{-1}(s)]\, |U_1^1(s)|\, ds \right\} \right| , \tag{4.A.6}$$

where c_0 is chosen large enough in (4.A.4) so that all the functions are analytical on U_{c_0}; the expression for the inverse Laplace operator $L^{-1}(\cdot)$ shown in (4.A.4) can be found in [Chu.2]; in (4.A.5), by examining G_c: $\mathbb{R}^m \rightarrow \mathbb{C}^{n_i \cdot n_o}$, we see that $G_c'(\cdot) \in \mathbb{C}^{m \times n_i n_o}$ is a well-defined differential [Die.1]; (4.A.6) is obtained from (4.A.5) by taking the absolute value sign into the integrand and noting that $|M^{i,j}| \leq \bar{\sigma}(M)$ and $\bar{\sigma}(MN) \leq \bar{\sigma}(M)\bar{\sigma}(N)$, where M and N are complex matrices and $M^{i,j}$ is the (i,j)th component of M. Since $\bar{\sigma}[(I + G_p G_c^1)^{-1}](s)$, $\bar{\sigma}[G_c'(\cdot)](s)$, and $\bar{\sigma}[(I + G_p G_c^2)^{-1}](s)$ can be shown to be $O(1)$ and $\bar{\sigma}[G_p(s)]U_1^1(s)$ is assumed to be $O(s^{-2})$, the last integral is well defined. This completes the proof.

■

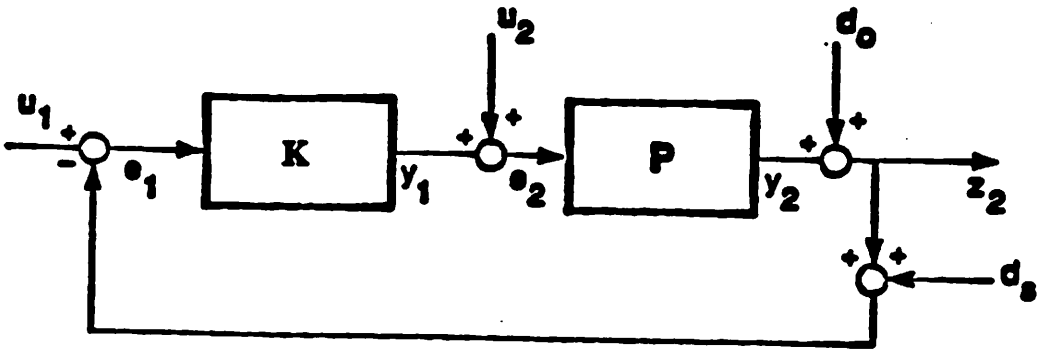

Figure 4.1: The feedback system $S(P, K)$.

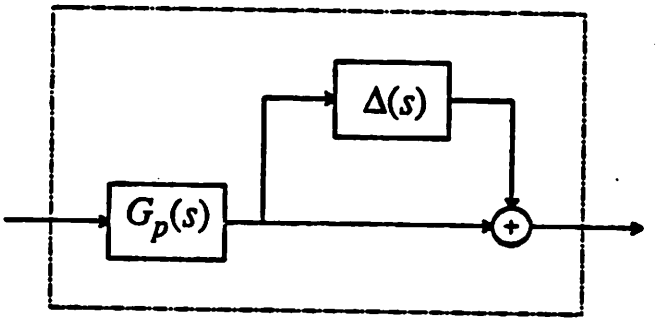

Figure 4.2: The perturbed plant, $\bar{G}_p(s) = (1 + \Delta(s))G_p(s)$.

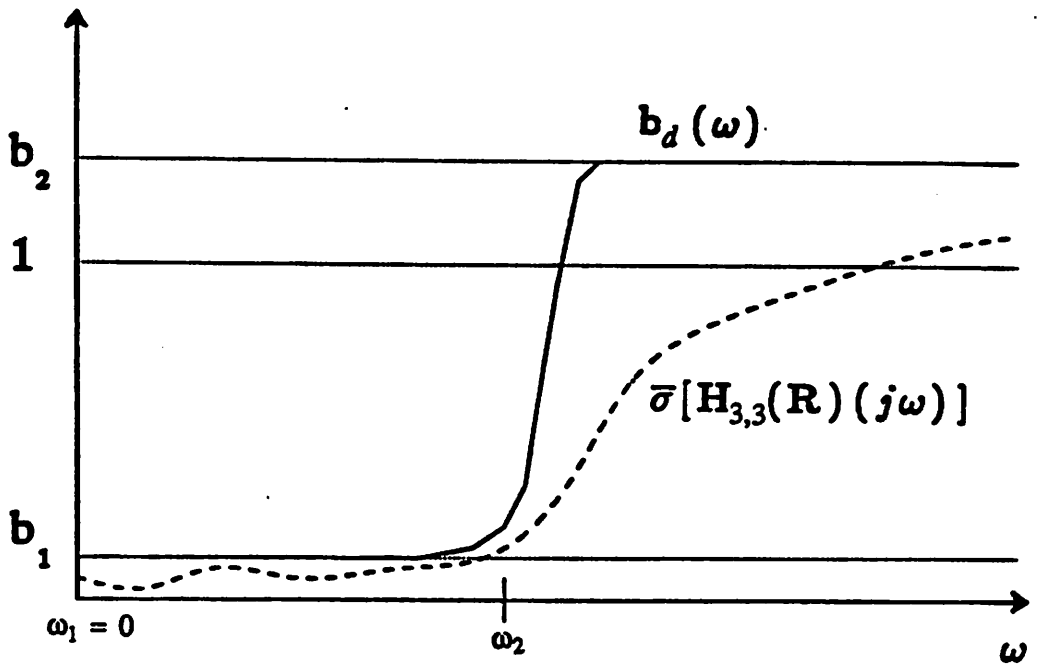

Figure 4.3: A sample of the function $b_d(\cdot)$.

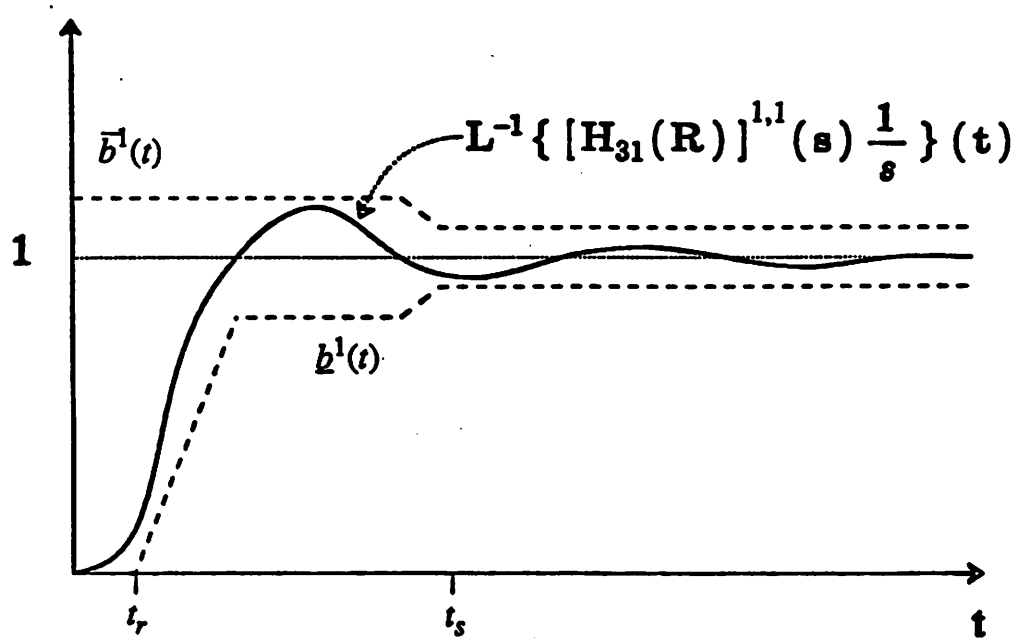

Figure 4.4: Time-domain step response specification.

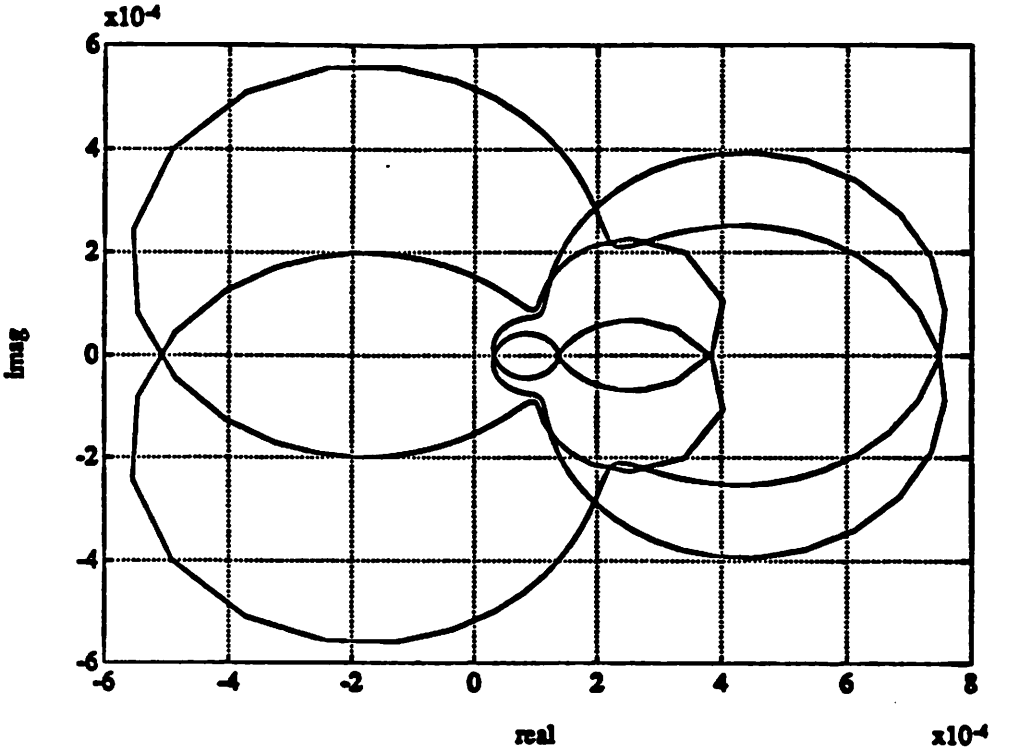

Figure 4.5: Modified Nyquist diagram (initial design).

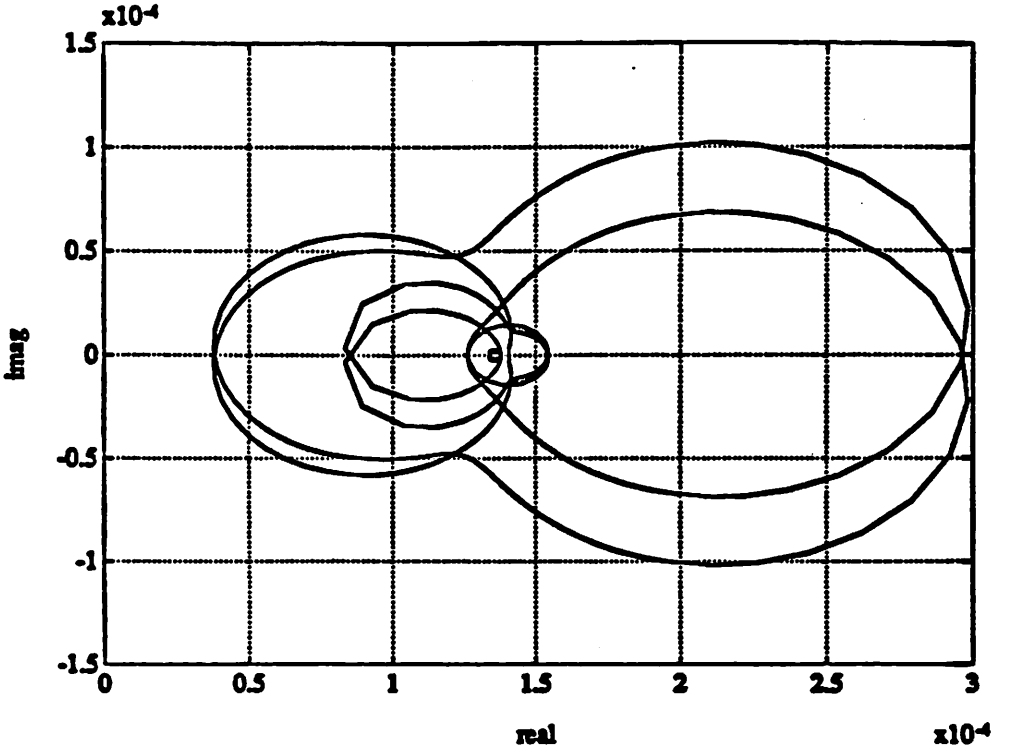

Figure 4.6: Modified Nyquist diagram for the stabilized system.

CHAPTER 5

OPTIMAL DESIGN OF FEEDBACK COMPENSATORS II: Q-PARAMETRIZATION

5.1 Introduction

In this chapter, we study the design of an optimal feedback system using Q-parametrization. With this approach, the design problem can be transformed into a convex optimization problem, allowing a global solution to be obtained. This approach has been applied to the design of control systems for finite dimensional systems [Pol.5].

In Section 5.2, we derive the coprime factorizations for the infinite dimensional plant and introduce the Q-parametrization for the compensators. Since the Q-parametrization introduces infinite dimensional compensators, we have to apply an approximation result to obtain finite dimensional stabilizing compensators. In Section 5.3, we transcribe the design requirements introduced in Chapter 4 into the convex H^∞ semi-infinite inequality form. We show that under reasonable assumptions, we can construct a minimizing sequence of finite dimensional compensators that converges to the global solution. We also discuss the numerical implementation of this approach. In Section 5.4, we give a design example in which we design a compensator to enhance the robustness of the feedback system to the modeling errors of the bending motion of a flexible cantilever beam.

5.2 Q-Parametrization for the Compensators and Preliminary Results

Consider the feedback system $S(P, K)$ introduced in Sections 2.2 and 2.4.

It follows from (2.2.6) that we can express the transfer function of the plant, $G_p(\cdot)$, as the sum of unstable and stable parts as follows:

$$
\begin{aligned}
G_p(s) &= C_p(sI - A_p)^{-1}B_p + D_p \\
&= (C_{p+}(sI_{n_+} - A_{p+})^{-1}B_{p+} + D_p) + C_{p-}(sI_- - A_{p-})^{-1}B_{p-} \\
&\triangleq G_p^+(s) + G_p^-(s),
\end{aligned}
\tag{5.2.1}
$$

where I and I_- are identity operators in Z and Z_- respectively, n_+ is the dimension of A_{p+}, $G_p^+(s) \triangleq C_{p+}(sI_{n_+} - A_{p+})^{-1}B_{p+} + D_p \in E(R(s))$, and $G_p^-(s) \triangleq C_{p-}(sI_- - A_{p-})^{-1}B_{p-}$. By definition of A_{p-}, there exists $\alpha_0 > \alpha$ and $M > 0$ such that $\|e^{A_{p-}t}\|_{Z_-} \le Me^{-\alpha_0 t}$, $\forall\ t > 0$. Therefore $G_p^-(s)$ is analytical in $U_{-\alpha_0}$ [Paz.1, Theorem 1.5.3] and converges to $0_{n_o \times n_i}$ at infinity in $U_{-\alpha_0}$ [Jac.1, Fact 20]. Therefore we have proved the following result.

Proposition 5.2.1: $G_p^-(s) \in E(W_{-\alpha}(s))$. ■

Since any matrix in $E(R(s))$ has coprime factorizations in $E(R_{-\alpha}(s))$ [Vid.1], $G_p^+(s)$ can be assumed to have the following right and left coprime factorizations

$$G_p^+ \triangleq N_{pr}D_{pr}^{-1}\ ;\ \det D_{pr} \not\equiv 0, \tag{5.2.2a}$$

$$\triangleq D_{pl}^{-1}N_{pl}\ ;\ \det D_{pl} \not\equiv 0, \tag{5.2.2b}$$

with the corresponding Bezout identity

$$\begin{bmatrix} V_{pr} & U_{pr} \\ -N_{pl} & D_{pl} \end{bmatrix} \begin{bmatrix} D_{pr} & -U_{pl} \\ N_{pr} & V_{pl} \end{bmatrix} = I_{n_i+n_o}, \tag{5.2.3}$$

where $V's$, $U's$, $N's$ and $D's$ all belong to $E(R_{-\alpha}(s))$.[1] According to [Net.2], the $V's$, $U's$, $N's$ and $D's$ in (5.2.3) can be derived from the matrices A_{p+}, B_{p+}, C_{p+}, and D_p. The following result is easily established from (5.2.3).

[1] Whenever it is clear that variables are functions of the complex variable s, we will omit it for simplicity of notation.

Proposition 5.2.2: $(N_{pr} + G_p^- D_{pr},\ D_{pr})$ and $(D_{pl},\ N_{pl} + D_{pl} G_p^-)$ are respectively the right and the left coprime factorizations of $G_p = G_p^+ + G_p^-$ over $E(W_{-\alpha})$ with the Bezout identity

$$\begin{bmatrix} V_{pr} - U_{pr} G_p^- & U_{pr} \\ -(N_{pl} + D_{pl} G_p^-) & D_{pl} \end{bmatrix} \begin{bmatrix} D_{pr} & -U_{pl} \\ N_{pr} + G_p^- D_{pr} & V_{pl} - G_p^- U_{pl} \end{bmatrix} = I_{n_i + n_o}\,. \tag{5.2.4}$$

■

Next we restate Theorem 2.4.1 in terms of coprime factorization matrices of the plant and the compensator. Suppose that the transfer function of the α-stabilizable and α-detectable compensator, $G_c(\cdot)$, has right and left coprime factorizations $(N_{cr},\ D_{cr})$ and $(D_{cl},\ N_{cl})$, respectively, with $D's$ and $N's$ belonging to $E(R_{-\alpha}(s))$. Define

$$\chi_1(s) \triangleq \det\,(\, D_{cl} D_{pr} + N_{cl}(N_{pr} + G_p^- D_{pr})\,) \tag{5.2.5}$$

and

$$\chi_2(s) \triangleq \det\,(\, D_{pl} D_{cr} + (N_{pl} + D_{pl} G_p^-) N_{cr}\,). \tag{5.2.6}$$

Then Theorem 2.4.1 can be restated as follows.

Theorem 5.2.1: The feedback system $S(P, K)$ is α-stable if and only if

$$Z(\,\chi_1\,) \subset D_{-\alpha}, \tag{5.2.7}$$

or equivalently

$$Z(\,\chi_2\,) \subset D_{-\alpha}. \tag{5.2.8}$$

Proof: (i) It follows from (2.4.4) that

$$\begin{aligned}\chi(s) &= \det(sI_{n+} - A_{p+}) \det(sI_{n_c} - A_c) \det(I_{n_i} + G_c(s)G_p(s)) \\ &= \det(sI_{n+} - A_{p+}) \det(sI_{n_c} - A_c) \det(I_{n_i} + D_{cl}^{-1}N_{cl}(N_{pr} + G_p^- D_{pr})D_{pr}^{-1}) \\ &= \frac{\det(sI_{n+} - A_{p+})}{\det D_{pr}(s)} \frac{\det(sI_{n_c} - A_c)}{\det D_{cl}(s)} \det(D_{cl}D_{pr} + N_{cl}(N_{pr} + G_p^- D_{pr})) \\ &= \frac{\det(sI_{n+} - A_{p+})}{\det D_{pr}(s)} \frac{\det(sI_{n_c} - A_c)}{\det D_{cl}(s)} \chi_1(s) \,.\end{aligned} \tag{5.2.9}$$

Suppose that the compensator has an α-stabilizable and α-detectable state-space realization (A_c, B_c, C_c, D_c). Then there exist $K_c \in \mathbb{R}^{n_o \times n_c}$ and $F_c \in \mathbb{R}^{n_c \times n_i}$ such that

$$Z(\det(sI - (A_c + B_cK_c))) \subset D_{-\alpha} \;\;\&\;\; Z(\det(sI - (A_c + F_cC_c))) \subset D_{-\alpha}. \tag{5.2.10}$$

According to [Net.2], a left coprime factorization of G_c, $(\hat{D}_{cl}, \hat{N}_{cl})$ can be chosen as follows:

$$\hat{D}_{cl} = I_{n_i} - C_c(sI_{n_c} - A_c + F_cC_c)^{-1}F_c, \tag{5.2.11a}$$

$$\hat{N}_{cl} = C_c(sI_{n_c} - A_c + F_cC_c)^{-1}B_c + D_{cl}D_c. \tag{5.2.11b}$$

It follows from [Vid.1, Theorem 4.1.43] that there exists an $M(s) \in E(R_{-\alpha}(s))$ such that $M^{-1}(s) \in E(R_{-\alpha}(s))$ and

$$D_{cl} = M \cdot \hat{D}_{cl}, \tag{5.2.12a}$$

$$N_{cl} = M \cdot \hat{N}_{cl}. \tag{5.2.12b}$$

Furthermore, we have (see [Vid.1, p. 393])

$$\det M \;\&\; \det M^{-1} \in R_{-\alpha}(s). \tag{5.2.13}$$

It follows from (5.2.11a) that

$$\begin{aligned}\hat{D}_{cl} &= I_{n_i} - C_c(sI_{n_c} - A_c + F_cC_c)^{-1}F_c \\ &= I_{n_i} - (I_{n_i} + C_c(sI_{n_c} - A_c)^{-1}F_c)^{-1}C_c(sI_{n_c} - A_c)^{-1}F_c \\ &= (I_{n_i} + C_c(sI_{n_c} - A_c)^{-1}F_c)^{-1}.\end{aligned} \tag{5.2.14}$$

Hence, for all $s \in U_{-\alpha}$, because of (5.2.10) and (5.2.13), we have

$$\begin{aligned}
\frac{\det(sI_{n_c} - A_c)}{\det D_{cl}(s)} &= \frac{\det(sI_{n_c} - A_c)}{\det(\hat{D}_{cl}(s)M(s))} = \frac{\det(sI_{n_c} - A_c)}{\det \hat{D}_{cl}(s)} \frac{1}{\det(M(s))} \\
&= \det(sI_{n_c} - A_c)\det(I_{n_i} + C_c(sI_{n_c} - A_c)^{-1}F_c)\cdot\det(M^{-1}(s)) \\
&= \det(sI_{n_c} - A_c)\det(I_{n_c} + F_cC_c(sI_{n_c} - A_c)^{-1})\cdot\det(M^{-1}(s)) \\
&= \det(sI_{n_c} - (A_c - F_cC_c))\cdot\det(M^{-1}(s)) \neq 0 .
\end{aligned} \tag{5.2.15}$$

A similar argument can be applied to show that $\dfrac{\det(sI_{n+} - A_{p+})}{\det D_{pr}(s)} \neq 0$,$\forall\ s \in U_{-\alpha}$. Hence $Z(\chi) \subset D_{-\alpha}$ if and only if $Z(\chi_1) \subset D_{-\alpha}$. It follows from Theorem 2.4.1 that the feedback system is α-stable if and only if $Z(\chi_1(s)) \subset D_{-\alpha}$.

(ii) It follows from (2.4.4) that $\chi(s)$ can be expressed in the following alternative way:

$$\begin{aligned}
\chi(s) &= \det(sI_{n+} - A_{p+})\det(sI_{n_c} - A_c)\det(I_{n_o} + G_p(s)G_c(s)) \\
&= \det(sI_{n+} - A_{p+})\det(sI_{n_c} - A_c)\det(I_{n_o} + D_{pl}^{-1}(N_{pl} + D_{pl}G_p)N_{cr}D_{cr}^{-1}) \\
&= \frac{\det(sI_{n+} - A_{p+})}{\det D_{pl}(s)}\frac{\det(sI_{n_c} - A_c)}{\det D_{cr}(s)}\det(D_{pl}D_{cr} + (N_{pl} + D_{pl}G_p^-)N_{cr}) \\
&= \frac{\det(sI_{n+} - A_{p+})}{\det D_{pl}(s)}\frac{\det(sI_{n_c} - A_c)}{\det D_{cr}(s)}\chi_2(s) .
\end{aligned} \tag{5.2.16}$$

According to [Net.2], a right coprime factorization of G_c, $(\hat{N}_{cr}, \hat{D}_{cr})$ can be chosen as follows:

$$\hat{D}_{cr} = I_{n_o} - K_c(sI_{n_c} - A_c + B_cK_c)^{-1}B_c, \tag{5.2.17a}$$

$$\hat{N}_{cr} = C_c(sI_{n_c} - A_c + B_cK_c)^{-1}B_c + D_cD_{cr} . \tag{5.2.17b}$$

Following the steps in part (i), we can prove that the feedback system is α-stable if and only if $Z(\chi_2) \subset D_{-\alpha}$. The proof is therefore completed.

■

Now we define a set of feedback compensators, $\overline{S}(P)$, as follows

$$\overline{S}(P) = \left\{ \left[V_{pr} - U_{pr}G_p^- - Q(N_{pl} + D_{pl}G_p^-)\right]^{-1}(U_{pr} + QD_{pl}) \mid Q \in E(W_{-\alpha}(s)), \right. \\ \left. \det(V_{pr} - U_{pr}G_p^- - Q(N_{pl} + D_{pl}G_p^-)) \not\equiv 0 \right\}. \tag{5.2.18}$$

Define $\overline{D}_{cl} \triangleq V_{pr} - U_{pr}G_p^- - Q(N_{pl} + D_{pl}G_p^-)$ and $\overline{N}_{cl} \triangleq U_{pr} + QD_{pl}$. It is straightforward to check from (5.2.4) that

$$\overline{D}_{cl}D_{pr} + \overline{N}_{cl}(N_{pr} + G_p^-D_{pr}) = I_{n_i}. \tag{5.2.19}$$

The way we formulate $\overline{S}(P)$ in (5.2.18) is the so-called Q-parametrization for the compensator in the factorization approach of control system theory. Note that the Q-parametrization introduces infinite dimensional compensators.

Next, we derive a set of finite dimensional α-stabilizing compensators from $\overline{S}(P)$ defined in (5.2.18). By Proposition 4.2.1, any function $f: \mathbb{C} \to \mathbb{C}$ belonging to $W_{-\alpha}(s)$ can be uniformly approximated by a rational function which is analytic on $U_{-\alpha}$. Suppose the $\overline{D}_{cl}$ and the $\overline{N}_{cl}$ in (5.2.18) are approximated by functions in $R_{-\alpha}(s)$, say D_{cl} and N_{cl}, in the $H_{-\alpha}(s)$ space such that

$$D_{cl}(s) \triangleq \overline{D}_{cl}(s) + \Delta_1(s), \tag{5.2.20a}$$

$$N_{cl}(s) \triangleq \overline{N}_{cl}(s) + \Delta_2(s). \tag{5.2.20b}$$

The following theorem provides a sufficient condition in terms of Δ_1 and Δ_2 so that the α-stabilizable and α-detectable compensator with the transfer function $D_{cl}^{-1}N_{cl}$ stabilizes the plant.

Theorem 5.2.2: Suppose that a α-stabilizable and α-detectable compensator has a transfer function $D_{cl}^{-1}N_{cl}$ with D_{cl} and N_{cl} defined in (5.2.20a-b). If Δ_1 and Δ_2 in (5.2.20a-b) satisfy

$$\|\Delta_1(s)D_{pr}(s) + \Delta_2(s)(N_{pr} + G_p^- D_{pr})(s)\|_\infty < 1 \ , \tag{5.2.21}$$

then this finite dimensional compensator stabilizes the plant with a stability margin α.

Proof: According to Theorem 5.2.1, the proof is complete if we can show that $Z(\chi) \subset D_{-\alpha}$. It follows from (5.2.20a,b) and (5.2.19) that

$$\begin{aligned} \chi_1(s) &= \det(D_{cl}D_{pr} + N_{cl}(N_{pr} + G_p^- D_{pr})) \\ &= \det\left[I_{n_i} + \Delta_1(s)D_{pr}(s) + \Delta_2(s)(N_{pr} + G_p^- D_{pr})(s)\right] . \end{aligned} \tag{5.2.22}$$

Now we prove by contradiction that $\det\{I_{n_i} + \Delta_1(s)D_{pr}(s) + \Delta_2(s)(N_{pr} + G_p^- D_{pr})(s)\} \neq 0$, $\forall\ s \in U_{-\alpha}$. Suppose that $\det\{I_{n_i} + \Delta_1(s)D_{pr}(s) + \Delta_2(s)(N_{pr} + G_p^- D_{pr})(s)\} = 0$ for some $s \in U_{-\alpha}$. Assume that $[\Delta_1(s)D_{pr}(s) + \Delta_2(s)(N_{pr} + G_p^- D_{pr})(s)]$ has the singular value decomposition $U\Lambda V^*$, where U and V are unitary complex $n_i \times n_i$ matrices, V^* denotes the complex conjugate transpose matrix of V, and Λ is a diagonal real $n_i \times n_i$ matrix whose diagonal elements are positive but less than 1 because of (5.2.21). Then there exists a vector $u \in \mathbb{C}^{n_i}$ such that $(I_{n_i} + U\Lambda V^*)u = 0$. However, this means that $|u| = |U\Lambda V^* u| = |\Lambda V^* u| < |V^* u| = |u|$, which is a contradiction. Hence $\det\{(I_{n_i} + \Delta_1(s)D_{pr}(s) + \Delta_2(s)(N_{pr} + G_p^- D_{pr})(s))\} \neq 0$, $\forall\ s \in U_{-\alpha}$, which implies that $Z(\chi_1) \subset D_{-\alpha}$. The proof is therefore completed. ■

Next we show that the transfer function of any finite dimensional stabilizing compensator can be expressed in the form of (5.2.18). In other words, the set of transfer functions defined in (5.2.18) contains all the rational transfer functions of finite dimensional stabilizing compensators.

Theorem 5.2.3: For each finite dimensional stabilizing compensator which is α-stabilizable and α-detectable and has the transfer function $D_{cl}^{-1}N_{cl}$, we can find a $Q \in E(W_{-\alpha})$ such that

$$D_{cl}^{-1}N_{nl} = \left[V_{pr} - U_{pr}G_p^- - Q(N_{pl} + D_{pl}G_p^-)\right]^{-1}(U_{pr} + QD_{pl}) \text{ .}^2 \tag{5.2.23}$$

Proof: Since we assume that the compensator stabilizes the plant, it follows from Theorem 5.2.1 that

$$Z(\det M(s)) \subset D_{-\alpha}, \tag{5.2.24}$$

where

$$M(s) \triangleq D_{cl}D_{pr} + N_{cl}(N_{pr} + G_p^-D_{pr}) \subset W_{-\alpha}(s)^{n_i \times n_i}. \tag{5.2.25}$$

It is easy to check that $\lim_{\substack{s \to \infty \\ s \in U_{-\alpha}}} \det(M(s)) = \lim_{\substack{s \to \infty \\ s \in U_{-\alpha}}} \det(D_{cl}D_{pr} + N_{cl}(N_{pr} + G_p^-D_{pr}))(s)$ $= c_0 \cdot \det(I_{n_i} + D_cD_p) \neq 0$, where $c_0 \in \mathbb{R}$ is some nonzero constant. Combining this result with (5.2.24), we obtain $(\det M(s))^{-1} \in W_{-\alpha}(s)$ and

$$M^{-1}(s) \in W_{-\alpha}(s)^{n_i \times n_i} . \tag{5.2.26}$$

Now we rewrite (5.2.25) in the following form:

$$M^{-1}D_{cl}D_{pr} + M^{-1}N_{cl}(N_{pr} + G_p^-D_{pr}) = I_{n_i} . \tag{5.2.27}$$

Therefore, we have

$$(M^{-1}D_{cl},\ M^{-1}N_{cl})\begin{bmatrix} D_{pr} & -U_{pl} \\ N_{pr} + G_p^-D_{pr} & V_{pl} - G_p^-U_{pl} \end{bmatrix} = (I_{n_i},\ Q) , \tag{5.2.28}$$

where $Q \triangleq -M^{-1}D_{cl}U_{pl} + M^{-1}N_{cl}(V_{pl} - G_p^-U_{pl}) \in W_{-\alpha}(s)^{n_i \times n_o}$. It follows from (5.2.4) that

$$(M^{-1}D_{cl},\ M^{-1}N_{cl}) = (I_{n_i},\ Q)\begin{bmatrix} V_{pr} - U_{pr}G_p^- & U_{pr} \\ -(N_{pl} + D_{pl}G_p^-) & D_{pl} \end{bmatrix}$$

Note that (5.2.23) does not imply that $D_{cl} = V_{pr} - U_{pr}G_p^- - Q(N_{pl} + D_{pl}G_p^-)$ and $N_{cl} = U_{pr} + QD_{pl}$.

$$= \begin{bmatrix} (V_{pr} - U_{pr}G_p^-) - Q(N_{pl} + D_{pl}G_p^-) \\ U_{pr} + QD_{pl} \end{bmatrix}. \tag{5.2.29}$$

Hence,

$$\begin{aligned} D_{cl}^{-1}N_{cl} &= (M^{-1}D_{cl})^{-1}(M^{-1}N_{cl}) \\ &= \left[V_{pr} - U_{pr}G_p^- - Q(N_{pl} + D_{pl}G_p^-)\right]^{-1}(U_{pr} + QD_{pl}) , \end{aligned} \tag{5.2.30}$$

and the proof is completed. ■

In the next section, we obtain the input-output maps in terms of the parameter Q. We show that the elements of input-output maps are affine functions of Q and then transform the design specifications introduced in Chapter 4 into convex semi-infinite forms. Theorems 5.2.2 and 5.2.3 are applied to obtain a minimizing sequence of finite dimensional stabilizing compensators that converges to the global optimal solution.

5.3 Optimal Design of Feedback Compensators

5.3.1 Problem Formulation

We substitute $G_c(\cdot)$ in (4.3.1) with that defined in (5.2.18). By (5.2.4), we obtain the corresponding achievable (stable) input-output maps, $\overline{H}$, in terms of the parameter $Q \in E(W_{-\alpha}(s))$ as follows

$$\overline{H} = \begin{bmatrix} -\overline{N}_{pr}Q\overline{D}_{pl} + \overline{V}_{pl}\overline{D}_{pl} & \overline{N}_{pr}Q\overline{N}_{pl} - \overline{N}_{pr}\overline{V}_{pr} & \overline{N}_{pr}Q\overline{D}_{pl} - \overline{V}_{pl}\overline{D}_{pl} & \overline{N}_{pr}Q\overline{D}_{pl} - \overline{V}_{pl}\overline{D}_{pl} \\ \overline{D}_{pr}Q\overline{D}_{pl} + \overline{D}_{pr}\overline{U}_{pr} & -\overline{D}_{pr}Q\overline{N}_{pl} + D_{pr}\overline{V}_{pr} & -\overline{D}_{pr}Q\overline{D}_{pl} - \overline{D}_{pr}\overline{U}_{pr} & -\overline{D}_{pr}Q\overline{D}_{pl} - \overline{D}_{pr}\overline{U}_{pr} \\ \overline{N}_{pr}Q\overline{D}_{pl} + \overline{N}_{pr}\overline{U}_{pr} & -\overline{N}_{pr}Q\overline{N}_{pl} + \overline{N}_{pr}\overline{V}_{pr} & -\overline{N}_{pr}Q\overline{D}_{pl} + \overline{V}_{pl}\overline{D}_{pl} & -\overline{N}_{pr}Q\overline{D}_{pl} - \overline{N}_{pr}\overline{U}_{pr} \end{bmatrix} \tag{5.3.1}$$

where

$$\begin{aligned} &\overline{N}_{pr} = N_{pr} + G_p^-D_{pr},\ \overline{D}_{pr} = D_{pr},\ \overline{U}_{pr} = U_{pr},\ \overline{V}_{pr} = V_{pr} - U_{pr}G_p^-, \\ &\overline{N}_{pl} = N_{pl} + D_{pl}G_p^-,\ \overline{D}_{pl} = D_{pl},\ \overline{U}_{pl} = U_{pl},\ \overline{V}_{pl} = V_{pl} - G_p^-U_{pl} . \end{aligned} \tag{5.3.2}$$

The various design specifications considered in Chapter 4 can be reformulated as follows.

(i) *Stability Robustness*:

We define $\phi^1 : W_{-\alpha}(s)^{n_i \times n_o} \to \mathbb{R}$ as

$$\begin{aligned}\phi^1(Q) &\triangleq \sup_{\omega \in [0,\infty]} \{\bar{\sigma}[H_{3,1}(-\alpha + j\omega)] - 1/b(\omega)\} \\ &= \sup_{\omega \in [0,\infty]} \{\bar{\sigma}[\{\bar{N}_{pr}Q\bar{D}_{pl} + \bar{N}_{pr}\bar{U}_{pr}\}(-\alpha + j\omega)] - 1/b(\omega)\} .\end{aligned} \tag{5.3.3}$$

Then if

$$\phi^1(Q) \le 0 \tag{5.3.4}$$

holds, the compensator will stabilize not only the nominal plant, but also the perturbed plant whose transfer function is $(1+\Delta(s))G_p(s)$ with $\Delta(s)$ satisfying (4.3.3).

(ii) *Disturbance Suppression and Good Command Tracking:*

Let $\phi^2 : W_{-\alpha}(s)^{n_i \times n_o} \to \mathbb{R}$ be defined by

$$\begin{aligned}\phi^2(Q) &\triangleq \sup_{\omega \in [0,\infty]} \{\bar{\sigma}[H_{3,3}(j\omega)] - b_d(\omega)\} \\ &= \sup_{\omega \in [0,\infty]} \{\bar{\sigma}[-\bar{N}_{pr}Q\bar{D}_{pl} + \bar{V}_{pl}\bar{D}_{pl}(j\omega)] - b_d(\omega)\} ,\end{aligned} \tag{5.3.5}$$

where $b_d(\cdot)$ is a continuous bound function. Good command tracking and disturbance rejection requires

$$\phi^2(Q) \le 0 . \tag{5.3.6}$$

(iii) *Plant Saturation Avoidance:*

For plant saturation avoidance, we define the performance function $\phi^3 : W_{-\alpha}(s)^{n_i \times n_o} \to \mathbb{R}$ by

$$\begin{aligned}\phi^3(Q) &\triangleq \sup_{\omega \in [0,\infty]} \{\bar{\sigma}[H_{21}(j\omega)] - b_s\} \\ &= \sup_{\omega \in [0,\infty]} \{\bar{\sigma}[(\bar{D}_{pr}Q\bar{D}_{pl} + \bar{D}_{pr}\bar{U}_{pr})(j\omega)] - b_s\} .\end{aligned} \tag{5.3.7}$$

The saturation avoidance requirement can be formulated as

$$\phi^3(Q) \le 0 . \tag{5.3.8}$$

(iv) *I/O Map Decoupling:*

By defining ϕ^4: $W_{-\alpha}(s)^{n_i \times n_o} \to \mathbb{R}$ by

$$\begin{aligned}\phi^4(Q) &\triangleq \sup_{\substack{\omega \in [0,\infty] \\ 1 \le i \le n_i,\ 1 \le j \le n_o,\ i \ne j}} \{|[H_{3,1}]^{i,j}(j\omega)| - \varepsilon\} \\ &= \sup_{\substack{\omega \in [0,\infty] \\ 1 \le i \le n_i,\ 1 \le j \le n_o,\ i \ne j}} \{|(\bar{N}_{pr}Q\bar{D}_{pl} + \bar{N}_{pr}\bar{U}_{pr})^{i,j}(j\omega)| - \varepsilon\} ,\end{aligned} \tag{5.3.9}$$

the I/O map decoupling can be achieved by requiring

$$\phi^4(Q) \le 0 . \tag{5.3.10}$$

As in the finite dimensional case [Pol.5], it is easy to show that all the ϕ's defined above are at least locally Lipschitz continuous in $H_{-\alpha}$.

(v) *Time Domain Response:*

Referring to (4.3.15), (4.3.16), we define ϕ^5 and ϕ^6: $W_{-\alpha}(s)^{n_i \times n_o} \to \mathbb{R}$ by

$$\begin{aligned}\phi^5(Q) &\triangleq \max_{t \in [0,t_f]} \left\{ L^{-1}\{[H_{3,1}(s)]^{1,1}U_1^1(s)]\}(t) - \underline{b}^1(t) \right\} \\ &= \max_{t \in [0,t_f]} \left\{ L^{-1}\{[\bar{N}_{pr}Q\bar{D}_{pl} + \bar{N}_{pr}\bar{U}_{pr}]^{1,1}(s)U_1^1(s)\}(t) - \underline{b}^1(t) \right\}\end{aligned} \tag{5.3.11}$$

and

$$\phi^6(Q) = \max_{t \in [0,t_f]} \left\{ \bar{b}^1(t) - L^{-1}\{[\bar{N}_{pr}Q\bar{D}_{pl} + \bar{N}_{pr}\bar{U}_{pr}]^{1,1}(s)U_1^1(s)\}(t) \right\} . \tag{5.3.12}$$

Then the following two inequalities

$$\phi^5(Q) \le 0 \tag{5.3.13}$$

and

$$\phi^6(Q) \le 0 \tag{5.3.14}$$

guarantee satisfactory time domain responses.

It can be shown that $\phi^5(\cdot)$ and $\phi^6(\cdot)$ are Lipschitz continuous in the Hardy space $H_{-\alpha}$ under the assumption that $\overline{\sigma}[\overline{N}_{pr}(s)]\overline{\sigma}[\overline{D}_{pl}]U_{1,1}(s) = O(s^{-2})$. The proof is similar to that given in [Pol.5].

It is easy to observe the following from the above examples:

Proposition 5.3.1: The functions $\phi^i : (W_{-\alpha}(s)^{n_i \times n_o}, \|\cdot\|_\infty) \to \mathbb{R}$, $1 \le i \le 6$, defined above, are affine and hence convex functions, where the $\|\cdot\|_\infty$ is the H^∞-norm in $H_{-\alpha}$. ■

5.3.2 Optimal System Design

Suppose that we have transformed the various frequency- and time-domain design requirements into the following optimization problem OP :

$$OP : \min_{Q \in W_{-\alpha}(s)^{n_i \times n_o}} \{\phi^0(Q) \mid \phi^i(Q) \le 0,\ i \in I_0\}, \tag{5.3.15}$$

where $I_0 = \{1, 2, \cdots, k_0\}$ and k_0 is the number of constraints. We assume that the functions, $\phi's$, satisfy the following assumption.

Assumption 5.3.1: (i) Each $\phi^k(\cdot)$, $k \in \{0\} \cup I$, is an affine function and hence, Lipschitz continuous and convex in the Hardy space $H_{-\alpha}$. (ii) There exist $\overline{Q} \in W_{-\alpha}(s)^{n_i \times n_o}$ and $\delta > 0$ such that $\phi^i(\overline{Q}) \le -\delta$ for all $i \in I_0$. ■

The second part of Assumption 5.3.1 guarantees that the feasible set of the optimization problem OP, $\{Q \in W_{-\alpha}(s)^{n_i \times n_o} \mid \phi^i(Q) \le 0,\ i \in I_0\}$, is not an empty set.

We parametrize the free parameter $Q \in W_{-\alpha}(s)^{n_i \times n_o}$ as follows: Let $p \in \mathbb{R}_+$, and for $n \in \mathbb{N}$, $x \in \mathbb{R}^{n \cdot n_i \cdot n_o}$, define the matrices $X_i \in \mathbb{R}^{n_i \times n_o}$, $i = 1, 2, \cdots, n$, by filling them in order, row-wise, with the components of x, i.e.,

$$[X_i]_{k,l} \triangleq [x]_{(i-1)n_i n_o + (k-1)n_o + l}, \quad k \in \underline{n_i},\ l \in \underline{n_o}, \tag{5.3.16}$$

where $\underline{n_i} \triangleq \{1, 2, \cdots, n_i\}$ and $\underline{n_o} \triangleq \{1, 2, \cdots, n_o\}$. Let $Q_n: \mathbb{R}^{n \cdot n_i \cdot n_o} \to W_{-\alpha}(s)^{n_i \times n_o}$ be defined by

$$Q_n(x) \triangleq \sum_{i=1}^{n} X_i \left(\frac{s-p+\alpha}{s+p+\alpha}\right)^{i-1}. \tag{5.3.17}$$

The parametrization (5.3.16-17) has the following useful properties:

Proposition 5.3.2: The set $\{Q_n(x) \mid x \in \mathbb{R}^{n \cdot n_i \cdot n_o},\ n \in \mathbb{N}\}$ is dense in $(W_{-\alpha}(s)^{n_i \times n_o}, \|\cdot\|_\infty)$. ■

The proof follows that of Proposition 4.2.1 line by line and is therefore omitted here.

Since the parametrization equation (5.3.17) is linear, it is easy to show that

Proposition 5.3.3: Each $\phi^k(Q_n(\cdot))'s : \mathbb{R}^{n \cdot n_i \cdot n_o} \to \mathbb{R}$, $k \in \{0\} \cup I_0$, is convex. ■

Now we consider the sequence of convex optimization problems,

$$OP_n: \min_{x \in \mathbb{R}^{n n_i n_o}} \left\{ \phi^0(Q_n(x)) \mid \phi^k(Q_n(x)) \le 0,\ k \in I_0 \right\}, \tag{5.3.18}$$

where $n \in \mathbb{N}$. Then given any $n \in \mathbb{N}$, it follows from Proposition 5.3.3 that there exists an $\hat{x}_n \in \mathbb{R}^{n n_i n_o}$ which achieves the minimum in (5.3.18) [Pol.5]. Define

$$\gamma \triangleq \inf_{Q \in W_{-\alpha}(s)^{n_i \times n_o}} \left\{ \phi^0(Q) \mid \phi^i(Q) \le 0,\ i \in I_0 \right\} \tag{5.3.19}$$

to be the optimal value of the optimization problem OP in (5.3.15). If Assumption 5.3.1 holds,

we have the following result:

Proposition 5.3.4: For all $\varepsilon > 0$, there exist $\rho \in (0, \varepsilon)$, $n_\varepsilon \in \mathbb{N}$ and $x_{n_\varepsilon} \in \mathbb{R}^{n_\varepsilon n_i n_o}$ such that

$$\phi^0(Q_{n_\varepsilon}(x_{n_\varepsilon})) \leq \gamma + \varepsilon \tag{5.3.20}$$

and

$$\phi^k(Q_{n_\varepsilon}(x_{n_\varepsilon})) \leq -\rho\,,\ k \in I_0\,. \tag{5.3.21}$$

■

The proof is similar to that given in [Pol.5] and is omitted here.

We can now give the following main result by applying Theorems 5.2.2, 5.2.3, and the above propositions.

Theorem 5.3.1: Suppose $\hat{Q}$ solves the OP problem in (5.3.15). Then there exists a sequence $\{\overline{Q}_n\} \subseteq W_{-\alpha}(s)$ such that the corresponding stabilizing compensators are *finite-dimensional* and $\{\overline{Q}_n\}$ is a minimizing sequence for the problem OP, i.e., each of $\overline{Q}_n$ satisfies all of the constraints and

$$\lim_{n \to \infty} \phi^0(\overline{Q}_n) = \gamma \tag{5.3.22}$$

and

$$\|\overline{Q}_n - \hat{Q}\|_\infty \to 0 \tag{5.3.23}$$

where $\|\cdot\|_\infty$ is the H^∞-norm in $H_{-\alpha}$.

Proof: By Proposition 5.3.4, for a given $\varepsilon > 0$, we can find $n_\varepsilon \in \mathbb{N}$, $\rho \in (0, \varepsilon)$, and $x_{n_\varepsilon} \in \mathbb{R}^{n_\varepsilon \cdot n_i \cdot n_o}$ such that (5.3.20-21) holds. This x_{n_ε} defines a $\overline{Q}_{n_\varepsilon} \in W_{-\alpha}(s)^{n_i \times n_o}$. Substituting this $\overline{Q}_{n_\varepsilon}$ in (5.2.18), we get

$$\overline{G}_{c,\varepsilon} = \left[V_{pr} - U_{pr}\overline{G_p} - \overline{Q}_{n_\varepsilon}(N_{pl} + D_{pl}\overline{G_p})\right]^{-1}(U_{pr} + \overline{Q}_{n_\varepsilon}D_{pl}) \triangleq \overline{D}_{n_\varepsilon}^{-1}\overline{N}_{n_\varepsilon} \tag{5.3.24}$$

where $\overline{D}_{n_\varepsilon} \triangleq V_{pr} - U_{pr}\overline{G_p} - \overline{Q}_{n_\varepsilon}(N_{pl} + D_{pl}\overline{G_p})$ and $\overline{N}_{n_\varepsilon} \triangleq U_{pr} + \overline{Q}_{n_\varepsilon}D_{pl}$. Note that $\overline{D}_{n_\varepsilon}$ is most likely not a rational function because of $\overline{G_p}$. Since $\overline{D}_{n_\varepsilon}$ and $\overline{N}_{n_\varepsilon} \in W_{-\alpha}(s)^{n_i \times n_o}$, it follows from Proposition 4.2.1 that there exists D_{n_ε} and $N_{n_\varepsilon} \in R_{-\alpha}(s)^{n_i \times n_o}$ such that[3]

$$D_{n_\varepsilon} = \overline{D}_{n_\varepsilon} + \Delta D_{n_\varepsilon}, \quad N_{n_\varepsilon} = \overline{N}_{n_\varepsilon} + \Delta N_{n_\varepsilon}, \tag{5.3.25a}$$

and

$$\|\Delta D_{n_\varepsilon}\|_\infty < \alpha_1\varepsilon, \quad \|\Delta N_{n_\varepsilon}\|_\infty < \alpha_2\varepsilon, \tag{5.3.25b}$$

where α_1 and α_2 are small enough such that

$$\|\Delta D_{n_\varepsilon}D_{pr} + \Delta N_{n_\varepsilon}(N_{pr} + \overline{G_p}D_{pr})\|_\infty < \|\Delta D_{n_\varepsilon}\|_\infty \cdot \|D_{pr}\|_\infty + \|\Delta N_{n_\varepsilon}\|_\infty \cdot \|N_{pr} + \overline{G_p}D_{pr}\|_\infty < 1. \tag{5.3.25c}$$

We conclude from Theorem 5.2.2 that $G_{c,\varepsilon} \triangleq D_{n_\varepsilon}^{-1}N_{n_\varepsilon} = (\overline{D}_{n_\varepsilon} + \Delta D_{n_\varepsilon})^{-1}(\overline{N}_{n_\varepsilon} + \Delta N_\varepsilon)$ is a stabilizing finite dimensional compensator. It follows from Theorem 5.2.3 that there exists a $Q_{n_\varepsilon} \in E(W_{-\alpha})$ such that

$$G_{c,\varepsilon} = \left[V_{pr} - U_{pr}\overline{G_p} - Q_{n_\varepsilon}(N_{pl} + D_{pl}\overline{G_p})\right]^{-1}(U_{pr} + Q_{n_\varepsilon}D_{pl}) . \tag{5.3.26}$$

We have the following equations from the Bezout identity expressed in (5.2.4):

$$U_{pr}(V_{pl} - \overline{G_p}U_{pl}) = (V_{pr} - U_{pr}\overline{G_p})U_{pl}, \tag{5.3.27a}$$

$$D_{pl}(V_{pl} - \overline{G_p}U_{pl}) = -(N_{pl} + D_{pl}\overline{G_p})U_{pl} + I_{n_o}, \tag{5.3.27b}$$

$$-U_{pr}(\overline{G_p}D_{pr} + N_{pr}) = (V_{pr} - U_{pr}\overline{G_p})D_{pr} - I_{n_i}, \tag{5.3.27c}$$

[3] Even though $\overline{N}_{n_\varepsilon} \in E(R_{-\alpha})$, it may have a very high order because of $\overline{Q}_{n_\varepsilon}$. For practical reasons, it is approximated by a one with a lower order.

$$-D_{pl}(G_p^- D_{pr} + N_{pr}) = -(N_{pl} + D_{pl}G_p^-)D_{pr} \,. \tag{5.3.27d}$$

It is then straightforward to show that

$$(U_{pr} + Q_{n_\varepsilon}D_{pl})\Big[V_{pl} - G_p^- U_{pl} - (G_p^- D_{pr} + N_{pr})Q_{n_\varepsilon}\Big] = \Big[V_{pr} - U_{pr}G_p^- - Q_{n_\varepsilon}(N_{pl} + D_{pl}G_p^-)\Big]\cdot (U_{pl} + D_{pr}Q_{n_\varepsilon}). \tag{5.3.28}$$

It follows from the above equation that $G_{c,\varepsilon}$ in (5.3.26) is equal to

$$G_{c,\varepsilon} = (U_{pl} + D_{pr}Q_{n_\varepsilon})\Big[V_{pl} - G_p^- U_{pl} - (G_p^- D_{pr} + N_{pr})Q_{n_\varepsilon}\Big]^{-1}. \tag{5.3.29}$$

Therefore we have

$$G_{c,\varepsilon}\Big[V_{pl} - G_p^- U_{pl} - (G_p^- D_{pr} + N_{pr})Q_{n_\varepsilon}\Big] = U_{pl} + D_{pr}Q_{n_\varepsilon}, \tag{5.3.30a}$$

which is equivalent to

$$\Big[G_{c,\varepsilon}(G_p^- D_{pr} + N_{pr}) + N_{pr}) + D_{pr}\Big]Q_{n_\varepsilon} = G_{c,\varepsilon}(V_{pl} - G_p^- U_{pl}) - U_{pl}. \tag{5.3.30b}$$

Hence it follows from (5.3.25a,b) that

$$\begin{aligned} Q_{n_\varepsilon} &= \Big[G_{c,\varepsilon}(G_p^- D_{pr} + N_{pr}) + D_{pr}\Big]^{-1}\Big[G_{c,\varepsilon}(V_{pl} - G_p^- U_{pl}) - U_{pl}\Big] \\ &= \Big[(\overline{D}_{n_\varepsilon} + \Delta D_{n_\varepsilon})^{-1}(\overline{N}_{n_\varepsilon} + \Delta N_{n_\varepsilon})(G_p^- D_{pr} + N_{pr}) + D_{pr}\Big]^{-1}\Big[(\overline{D}_{n_\varepsilon} + \Delta D_{n_\varepsilon})^{-1}(\overline{N}_{n_\varepsilon} + \Delta N_{n_\varepsilon})(V_{pl} - G_p^- U_{pl}) \\ &\qquad - U_{pl}\Big] \\ &= \Big[\overline{N}_{n_\varepsilon}(G_p^- D_{pr} + N_{pr}) + \overline{D}_{n_\varepsilon}D_{pr} + \Delta D_{n_\varepsilon}D_{pr} + \Delta N_{n_\varepsilon}(G_p^{-1} D_{pr} + N_{pr})\Big]^{-1}\Big[\overline{N}_{n_\varepsilon}(V_{pl} - G_p^- U_{pl}) - \overline{D}_{n_\varepsilon}U_{pl} \\ &\qquad - \Delta D_{n_\varepsilon}U_{pl} + \Delta N_{n_\varepsilon}(V_{pl} - G_p^- U_{pl})\Big]. \end{aligned} \tag{5.3.31a}$$

It follows from (5.3.27a-d) that $\overline{N}_{n_\varepsilon}(G_p^- D_{pr} + N_{pr}) + \overline{D}_{n_\varepsilon}D_{pr} = I_{n_i}$ and $\overline{N}_{n_\varepsilon}(V_{pl} - G_p^- U_{pl}) - \overline{D}_{n_\varepsilon}U_{pl} = \overline{Q}_{n_\varepsilon}$. Therefore

$$Q_{n_\varepsilon} = (I_{n_i} + \Delta D_{n_\varepsilon} D_{pr} + \Delta N_{n_\varepsilon}(G_p^- D_{pr} + N_{pr}))^{-1}(\overline{Q}_{n_\varepsilon} - \Delta D_{n_\varepsilon} U_{pl} + \Delta N_{n_\varepsilon}(V_{pl} - G_p^- U_{pl})) \ . \qquad \textbf{(5.3.31b)}$$

Hence

$$\begin{aligned} Q_{n_\varepsilon} - \overline{Q}_{n_\varepsilon} &= (I_{n_i} + \Delta D_{n_\varepsilon} D_{pr} + \Delta N_{n_\varepsilon}(G_p^- D_{pr} + N_{pr}))^{-1}(\overline{Q}_{n_\varepsilon} - \Delta D_{n_\varepsilon} U_{pl} + \Delta N_{n_\varepsilon}(V_{pl} - G_p^- U_{pl}) \\ &\qquad - (I_{n_i} + \Delta D_{n_\varepsilon} D_{pr} + \Delta N_{n_\varepsilon}(G_p^- D_{pr} + N_{pr}))\overline{Q}_{n_\varepsilon}) \\ &= (I_{n_i} + \Delta D_{n_\varepsilon} D_{pr} + \Delta N_{n_\varepsilon}(G_p^- D_{pr} + N_{pr}))^{-1}\Big[\Delta D_{n_\varepsilon}(-U_{pl} - D_{pr}\overline{Q}_{n_\varepsilon}) + \Delta N_{n_\varepsilon}(V_{pl} - G_p^- U_{pl} - (G_p^- D_{pr} + N_{pr})\overline{Q}_{n_\varepsilon})\Big]. \end{aligned} \tag{5.3.32}$$

We can choose α_1 and α_2 in (5.3.25b) small enough that $\|\Delta D_{n_\varepsilon} D_{pr} + \Delta N_{n_\varepsilon}(G_p^- D_{pr} + N_{pr})\|_\infty < 1/2$. Therefore $\|I_{n_i} + \Delta D_{n_\varepsilon} D_{pr} + \Delta N_{n_\varepsilon}(G_p^- D_{pr} + N_{pr})\|_\infty > 1/2$ and $(I_{n_i} + \Delta D_{n_\varepsilon} D_{pr} + \Delta N_{n_\varepsilon}(G_p^- D_{pr} + N_{pr}))^{-1}(s)$ exists for $s \in U_{-\alpha}$ with its H^∞-norm in $H_{-\alpha}$ bounded by 2. Also, there exists some $M > 0$ such that $max(\|-U_{pl} - D_{pr}\overline{Q}_{n_\varepsilon}\|_\infty, \|V_{pl} - G_p^- U_{pl} - (G_p^- D_{pr} + N_{pr})\overline{Q}_{n_\varepsilon}\|_\infty) \le M$. It follows from (5.3.32) that

$$\begin{aligned} \|Q_{n_\varepsilon} - \overline{Q}_{n_\varepsilon}\|_\infty &\le \|(I_{n_i} + \Delta D_{n_\varepsilon} D_{pr} + \Delta N_{n_\varepsilon}(G_p^- D_{pr} + N_{pr}))^{-1}\|_\infty \\ &\qquad \cdot \Big[\|\Delta D_{n_\varepsilon}\|_\infty \|-U_{pl} - D_{pr}\overline{Q}_{n_\varepsilon}\|_\infty + \|\Delta N_{n_\varepsilon}\|_\infty \|V_{pl} - G_p^- U_{pl} - (G_p^- D_{pr} + N_{pr})\overline{Q}_{n_\varepsilon}\|_\infty\Big] \\ &< 2M(\alpha_1 + \alpha_2)\varepsilon. \end{aligned} \tag{5.3.33}$$

Since every ϕ^k is continuous in Q for $k \in \{0\} \cup I$, by choosing α_1 and α_2 small enough, we have

$$\phi^0(Q_{n_\varepsilon}) \le \gamma + 2\varepsilon \tag{5.3.34}$$

$$\phi^k(Q_{n_\varepsilon}) \le -\frac{\rho}{2}, \ k \in I \tag{5.3.35}$$

Hence $\{Q_{n_\varepsilon}\}$ forms a minimizing sequence for the problem OP in (5.3.15) and the proof is completed.

■

Remark 5.3.1: (i) The above theorem states that we can always find a finite dimensiona stabilizing compensator that is as close as possible to the global optimal compensator. (ii)

According to (5.3.33-35), a suboptimal finite dimensional compensator with a prescribed (McMillan) order can be obtained by finding D_{cl} & $N_{cl} \in E(R_{-\alpha}(s))$ such that D_{cl} and N_{cl} have prescribed orders, and $\|D_{cl} - \overline{D}_{cl}\|_\infty$ and $\|N_{cl} - \overline{N}_{cl}\|_\infty$ are as small as possible. ■

5.3.3 Numerical Implementations

In the design process, we first evaluate the frequency responses of the infinite dimensional plant, $G_p(\cdot)$, which are discussed in Chapter 4. We then find the matrices A_{p+}, B_{p+}, and C_{p+} and evaluate $G_p^+(s) = C_{p+}(sI_{n+} - A_{p+})^{-1}B_{p+} + D_p$ and $G_p^-(s) = G_p(s) - G_p^+(s)$. The $U's$, $V's$, $D's$, $N's$ in (5.2.3) can be determined from (A_{p+}, B_{p+}, C_{p+}) [Net.2]. The simulations of the inverse Laplace transform for time-domain specifications are discussed in Section 4.4. The algorithm given in [Pol.5] can be applied to solve the optimization problem OP_n in (5.3.18). Suppose $\overline{D}_{cl}(s)^{-1}\overline{N}_{cl}(s)$ is the resulting optimal infinite dimensional compensators with $\overline{D}_{cl}$ and $\overline{N}_{cl}$ defined as in (5.3.24). By Remark 5.3.1, we can find a suboptimal fixed-order compensator with the factorization (D_{cl}, N_{cl}) by solving the following non-convex optimization problem:

$$\min_{z_1} \|D_{cl}(s, z_1) - \overline{D}_{cl}(s)\|_\infty, \quad \min_{z_2} \|N_{cl}(s, z_2) - \overline{N}_{cl}(s)\|_\infty, \tag{5.3.36}$$

where z_1 and z_2 are the vectors of design parameters which are the coefficients of the fixed-order rational matrices D_{cl} and N_{cl}, respectively. Since D_{cl} and N_{cl} are required to belong to $E(R_{-\alpha}(s))$, there are constraints for the elements of z_1 and z_2. For example, if we parametrize the (polynomial) denominators of the matrices D_{cl} and N_{cl} as we did for polynomials n_0 and d_0 in (4.2.9), we get similar constraints, shown in (4.2.8a,b), for those elements of z_1 and z_2 that are the coefficients of denominators of the components of D_{cl} and N_{cl}. The optimization problem can be solved by the algorithms developed in [Pol.3]. Suppose that the optimal solutions z_1^* and z_2^* of (5.3.36) are obtained. The α-stability of the resulting feedback system can be

checked

in two ways. The first way is to apply Theorem 5.2.2 to check whether the following sufficient condition is satisfied:

$$\|(D_{cl}(s, z_1^*) - \overline{D}_{cl}(s))D_{pr}(s) + (N_{cl}(s, z_2^*) - \overline{N}_{cl}(s))(N_{pr} + G_p^- D_{pr})(s)\|_\infty \leq 1. \tag{5.3.37}$$

The second way is based on the necessary and sufficient condition given in Theorem 5.2.1. We plot the Nyquist diagram by evaluating the following complex-value function,

$$\det(\, D_{cl}(s, z_1^*)D_{pr}(s) + N_{cl}(s, z_2^*)(N_{pr} + G_p^- D_{pr})(s)\,), \quad s \in \partial U_{-\alpha}. \tag{5.3.38}$$

The feedback system is stable if the Nyquist diagram does not encircle the origin. If the above stability criteria are not satisfied, we must increase the order of the compensator, go back to solve (5.3.36), and perform the stability tests again.

5.4. A Numerical Example

This design example uses the approach of Q-parametrization. We consider again the example of the flexible cantilever beam introduced in Section 2.3. We assume that $m = 2$, $cI = 0.01$, $EI = 1$, $M = 5$, $J = 0.5$ and that the point force actuators and point displacement sensors are colocated at $x = 1$.

We can enhance the system's stability robustness by solving the following optimization problem (see (5.3.3)):

$$\min_{Q \in E(W_{-\alpha})} \phi(Q) = \min_{Q \in E(W_{-\alpha})} \sup_{\omega \in [\omega_1, \omega_2]} \overline{\sigma}[\{\overline{N}_{pr} Q \overline{D}_{pl} + \overline{N}_{pr}\overline{U}_{pr}\}(-\alpha + j\omega)]\,. \tag{5.4.1}$$

We assume that the feedback system requires a stability margin $\alpha = 0.2$ and that the critical frequency range $[\omega_1, \omega_2]$ is chosen to be [0.01, 10]. The number of sampling points used is 24 and the sampling points are chosen to be geometrically distributed in [0.01, 10]. We

parametrize Q in the form of (5.3.17) with $p = 1.0$. We consider two cases of $n = 2$ and $n = 5$. For each case, the initial condition is chosen to be $X_1 = I_2$ and $X_i = 0$ for all other i's.

For $n = 2$, the value of $\phi(\cdot)$ decreases from 2533.36 to 727.1 in 20 iterations, which means that the allowable value of $b(\omega)$ defined in (4.3.3) at these 24 sampling points increases from 0.000395 to 0.00138. The final values are $X_1 = 640.02$ and $X_2 = 850.34$.

For $n = 5$, the value of $\phi(\cdot)$ decreases from 2533.36 to 407.6 in 29 iterations, which means that the allowable value of $b(\omega)$ at these 24 sampling points increases from 0.000395 to 0.00245. The final values are $X_1 = 851.19$, $X_2 = 979.92$, $X_3 = -606.2$, $X_4 = -69.92$ and $X_5 = -683.47$.

We plot these numerical results in Figure 5.1, where the x–axis indicates the number of iterations and the y–axis indicates the allowable value of max $b(\omega)$, which is equal to $\frac{1}{\phi(Q_n)}$, at the 24 sampling frequency points.

We apply the scaling techniques in [Pol.4] in the above numerical experiments to speed up the convergence.

5.5 Concluding Remarks

We have discussed optimal system design using Q-parametrization. The various frequency- and time-domain requirements are transformed into a convex semi-infinite optimization problem, and the numerical method of solving the optimization problem is presented. Since the problem is convex, the global solution can be obtained. We show that we can construct a minimizing sequence of finite dimensional stabilizing compensators that converges to the optimal solution. In a practical design, we solve the problem OP_n defined in (5.3.18) with n large enough that the optimal solution of OP_n is close enough to the optimal solution. We then solve (5.3.36) to obtain a suboptimal finite dimensional stabilizing compensator that is

close to the optimal solution.

One drawback of using Q-parametrization is the cumbersome and nonconvex model-reduction problem given in (5.3.36).

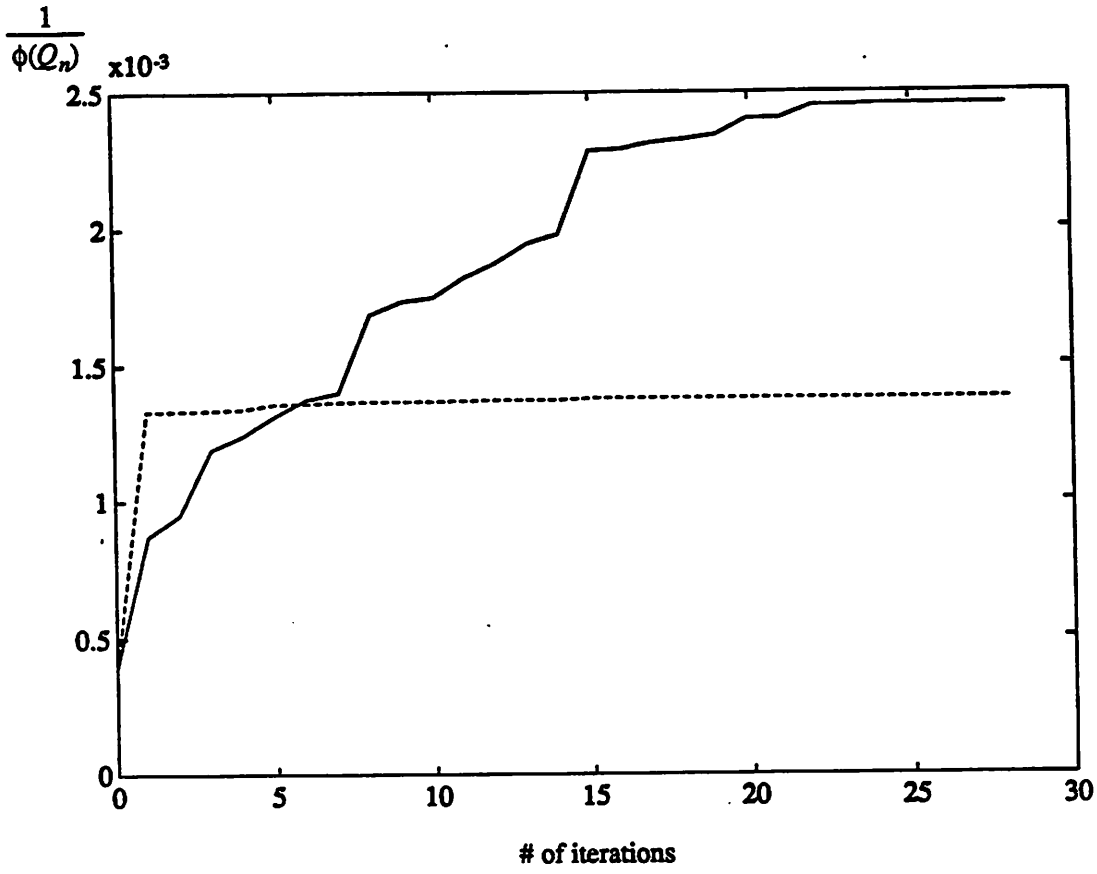

Figure 5.1: The value of $\frac{1}{\phi(Q_n)}$ for $n = 2$ and $n = 5$.

CHAPTER 6

CONCLUSIONS AND FUTURE RESEARCH

We have presented a design methodology for a class of infinite dimensional systems and applied it to the control system design for the bending motion of a flexible cantilever beam. In Chapter 2, we defined a characteristic function for the infinite dimensional feedback system and related its zeros to the exponential stability of the feedback systems. This result was used often in the later chapters to test the exponential stability of the closed-loop system. For exponentially stable plants, we constructed simple proportional-plus-multi-integral stabilizing compensators in Chapter 3 to asymptotically track polynomial-type inputs and suppress polynomial-type output disturbances. In Chapter 4, we considered a more sophisticated feedback system design to achieve various desirable system performances. We used the parametrized state-space form for the compensator, allowing the order of the compensator to be chosen in advance. We gave a computational stability criterion appropriate to the semi-infinite form. We also transformed other frequency- and time-domain design requirements into a constrained H^∞ semi-infinite optimization problem. However, because the resulting semi-infinite optimization problem is not convex, the problem of local minima may arise.

In Chapter 5, we used the alternative approach of Q-parametrization and transformed the design problem into a convex semi-infinite optimization problem. This approach allows us to find a global optimal solution. We constructed a sequence of finite-dimensional compensators which converges to the global solution. To obtain a suboptimal finite dimensional compensator with a prescribed order, we must solve a nonconvex order-reduction problem.

Some suggestions for future research are listed below.

(a) Integrated control system design for infinite dimensional systems

Some parameters of the plant can be adjustable, and these can become the design parameters. Choosing optimum values for these parameters will relax many stringent requirements for the feedback system. Such parameters may include the locations of the actuators and the sensors and various physical parameters, such as the beam sectional moment of inertia and beam shapes. Solving this type of problem requires further study of problem formulations and numerical algorithms.

(b) Numerical simulations

It would be interesting to do more numerical simulations for the two design approaches proposed in Chapters 4 and 5 and to compare their results. The two approaches could be combined in a hybrid design, and we could compare it with the two individual approaches by numerical simulations. Hybrid design might proceed as follows: First, use the approach of Q-parametrization to get an infinite dimensional compensator close enough to the optimal solution, and approximate it by a finite dimensional one with a prescribed order. Next, switch to using the parametrized state-space form for the compensator to do the minor adjustments, and use the finite dimensional compensator obtained from the approach of Q-parametrization as the initial design.

Both the hybrid and Q-parametrization approaches require approximation of the infinite dimensional compensator by a finite dimensional one with a prescribed order. An efficient and reliable algorithm for the approximation is therefore very desirable.

The idea of doing inverse Laplace transform with Fast Fourier Transform algorithms, proposed in Chapter 4 for time-domain requirements, needs to be justified by numerical simulations.

(c) Extensions to a general interconnection configuration

The design methodology proposed in Chapter 4 could be extended to the design of infinite dimensional systems with a general interconnection structure, such as two-degree-of-freedom feedback systems. Similar work has been done for finite dimensional systems [Wuu.1].

REFERENCES

[Asc.1] U. M. Ascher, R. M. Mattheij and R. D. Russell, *Numerical Solution of Boundary Value Problems for Ordinary Differential Equations*, Prentice Hall, 1988.

[Bal.1] A. V. Balakrishnan, *Applied Functional Analysis*, 2nd edition, Springer-Verlag, 1981.

[Bal.2] J. M. Balas, "Finite-Dimensional Control of Distributed Parameter Systems by Galerkin Approximation of Finite-Dimensional Controllers", *J. Math. Anal. Appl.*, Vol. 114, pp. 17-36, 1986.

[Ban.1] H. T. Banks and K. Kunisch, "The Linear Regulator Problem for Parabolic Systems," *SIAM J. Control*, Vol. 22, No. 5, pp. 684-698, 1984.

[Bis.1] S. K. Biswas and N. U. Ahmed, "Stabilization of a Class of Hybrid Systems Arising in Flexible Spacecraft," *JOTA*, Vol. 50, pp. 83-108, 1986.

[Boy.1] S. P. Boyd, V. Balakrishnan, C. H. Barratt, N. M. Khraishi, X. Li, D. G. Meyer and S. A. Norman, "A New CAD Method and Associated Architectures for Linear Controllers," *IEEE Trans. Automat. Contro.*, Vol. 33, No. 3, pp. 268-283, March 1988.

[Boy.2] S. P. Boyd and C. A. Desoer, "Subharmonic Functions and Performance Bounds on Linear Time-Invariant Feedback Systems," *U.C. Berkeley, Electronics Research Laboratory*, Memo. M84/51, June 11, 1984.

[Cal.1] F. M. Callier and C. A. Desoer, "Stabilization, Tracking and Disturbance Rejection in Multivariable Convolution Systems," *Annales de la Societe Scientifique de Bruxelles*, Vol. 94, No. 1, pp. 7-51, 1980.

[Che.1] C. T. Chen, *Linear System Theory and Design*, CBS College Publishing, 1984.

[Che.2] M. J. Chen and C. A. Desoer, "Necessary and Sufficient Condition for Robust Stability of Linear Distributed Feedback Systems," *International Journal of Control*, Vol. 35, No. 2, pp. 255-267, 1982.

[Chu.1] R. V. Churchill, J. W. Brown and R. F. Verhey, *Complex Variables and Applications*," McGraw-Hill, 1974.

[Chu.2] R. V. Churchill, *Modern Operational Mathematics in Engineering*, McGraw-Hill, New York, 1958.

[Clo.1] R. W. Clough and J. Penzien, *Dynamics of Structures*, McGraw-Hill, 1975.

[Cur.1] R. F. Curtain and D. Salamon, "Finite Dimensional Compensators for Infinite Dimensional Systems with Unbounded Input Operators," *SIAM J. Control and*

Optimization, Vol. 24, No. 4, pp. 797-816, July 1986.

[Cur.2] R. Curtain and A. Pritchard, "The Infinite Dimensional Riccati Equation," *J. Math. Anal. Appl.*, Vol. 47, pp. 43-57, 1974.

[Cur.3] R. F. Curtain and K. Glover, "Robust Stabilization of Infinite Dimensional Systems by Finite Dimensional Controllers," *Systems & Control Letters*, 7, pp. 41-47, 1986.

[Dav.1] E. J. Davison and A. Goldenberg, "Robust Control of A General Servomechanism Problem: The Servocompensator," *Automatica*, Vol. 11, No. 5, pp. 461-471, 1975.

[Dav.2] E. J. Davison, "The Robust Control of A Servomechanism Problem for Linear Time-Invariant Multivariable Systems," *IEEE Trans. Automat. Contr.*, Vol. AC-21, No. 1, pp. 25-34, Feb. 1976.

[Des.1] C. A. Desoer and Y. T. Wang, "Linear Time Invariant Robust Servomechanism Problem: A Self Contained Exposition," in *Advances in Control and Dynamical Systems*, Vol. 16, ed. C. T. Leondes , Academic Press, New York, pp. 81-129, 1980.

[Des.2] C. A. Desoer and A. N. Gundes, "Algebraic Design of Linear Multivariable Feedback Systems," in *Integral Methods in Science and Engineering* , ed. Fred R. Payne, et. al., Hemisphere Publishing Corporation, pp. 85-98, 1986.

[Des.3] C. A. Desoer, *Notes for a Second Course on Linear Systems*, Van Nostrand Reinhold, 1970.

[Die.1] J. Dieudonne, *Foundations of Modern Analysis*, Academic Press, New York, 1980.

[Doe.1] G. Doetsch, *Introduction to the Theory and Application of the Laplace Transformation*. Springer-Verlag, New York, 1974.

[Gib.1] J. S. Gibson, "An Analysis of Optimal Modal Regulation: Convergence and Stability," *SIAM J. Control and Optimization*, Vol. 19, No. 5, pp. 686-707, Sept. 1981.

[Gib.2] J. S. Gibson, D. L. Mingori, A. Adamian, and F. Jabbari, "Approximation of Optimal Infinite Dimensional Compensators for Flexible Structures," *Proc. Workshop on Identification and Control of Flexible Space* Structure, Vol. II, pp. 201-218, April 1985.

[Gib.3] J. S. Gibson, "The Riccati Integral Equations for Optimal Control Problems on Hilbert Spaces," *SIAM J. Control and Optimization*, Vol. 17, No. 4, July 1979.

[Gus.1] C. L. Gustafson and C. A. Desoer, "Controller Design for Linear Multivariable Feedback Systems with Stable Plants, Using Optimization with Inequality Constraints," *Int. J. ControlR, Vol. 37, No. 5, pp. 881-907, 1983.*

[Hua.1] F. Huang, "On the Mathematical Model for Linear Elastic Systems with Analytic Damping," *SIAM J. Control and Optimization*, Vol. 26, No. 3, pp. 714-724, May 1988.

[Ito.1] K. Ito and H. T. Tran, "Linear Quadratic Regulator Problem for Infinite Dimensional Linear Systems with Delays in Control," *Proceedings of the 27th IEEE Conference on Decision and Control*, Austin, Texas, 1988.

[Jac.1] C. A. Jacobson and C. N. Nett, "Linear State-Space Systems in Infinite-Dimensional Space: The Role and Characterization of Joint Stabilizability/Detectability," *IEEE Trans. Automat. Contr.*, Vol. 33, No. 6, pp. 541-549, June 1988.

[Jun.1] J. L. Junkins and J. D. Turner, *Optimal Spacecraft Rotational Maneuvers*, Studies in Astronautics, 3, Elsevier, Amsterdam, 1986.

[Jus.1] T. T. Jussila and H. N. Koivo, "Tuning of Multivariable PI-Controllers for Unknown Delay-Differential Systems," *Proc. American Control Conference*, Seattle, June 1986, pp. 745-750.

[Kat.1] T. Kato, *Perturbation Theory for Linear Operators*, Springer-Verlag, 1966.

[Koi.1] H. N. Koivo and S. A. Pohjolainen, "Tuning of Multivariable PI-Controllers for Unknown Systems with Input Delay," *Automatica*, Vol. 21, pp. 81-91, 1985.

[Laf.1] J. de Lafontaine and M. E. Stieber, "Sensor/Actuator Selection and Placement for Control of Elastic Continua," *Proceeding of the 4th Symposium on Control of Distributed Parameter Systems*, International Federation of Automatic Control, 1986.

[Log.1] H. Logemann and D. H. Owens, "Multivariable Tuning Regulators for Infinite-Dimensional Systems with Unbounded Control and Observation," *Proc. 26th IEEE Conf. Decision Contr.*, Dec. 1987, pp. 1227-1232.

[Log.2] H. Logemann and D. H. Owens, "Low-gain Feedback Control of Unknown Infinite-Dimensional Systems," *Research Report*, Dept. of Mathematics, Univ. of Strathclyde, 1987.

[Mei.1] L. Meirovitch, *Computational Methods in Structural Dynamics*, Sijthoff and Noordhoff Co., The Netherlands, 1980.

[Mov.1] R. Movaghar and E. Bayo, "An Initial Experiment on the End-Point Open-Loop Control of a Flexible Beam," *Proceedings of the IASTED Conference in Robotics and Automation*, Vol. 2, pp. 923-928, 1987.

[Nef.1] S. A. Nefedov and F. A. Sholokhovich, "A Criterion for the Stabilizability of Dynamical Systems with Finite-Dimensional Input," *Differential Equations*, pp. 163-

166, 1986.

[Net.1] C. N. Nett, C. A. Jacobson, and M. J. Balas, "Fractional Representation Theory: Robustness Results with Applications to Finite Dimensional Control of A Class of Linear Distributed Parameter Systems," *Proc. 22nd IEEE Conf. Decision Contr.*, Dec. 1983, pp. 268-280.

[Net.2] C. N. Nett, C. A. Jacobson, and M. J. Balas, "A Connection Between State-Space and Doubly Coprime Fractional Representations," *IEEE Trans. Automat. Contr.*, Vol. AC-29, No. 9, pp. 831-832, Sept. 1984.

[Nyq.1] H. Nyquist, "Regeneration Theory," *Bell Syst. Tech. J.* vol.2, pp.126-147, Jan. 1932.

[Opp.1] A. V. Oppenheim and R. W. Schafer, *Digital Signal Processing*, Prentice-Hall 1975.

[Paz.1] A. Pazy, *Semigroups of Linear Operators and Applications to Partial Differential Equations*, Springer-Verlag, 1983.

[Poh.1] S. A. Pohjolainen, "Robust Multivariable PI-Controller for Infinite Dimensional Systems," *IEEE Trans. Automat. Contr.*, Vol. AC-27, No. 1, pp. 17-30, Feb. 1982.

[Poh.2] S. A. Pohjolainen, "Robust Controller for Systems with Exponentially Stable Strongly Continuous Semigroups," *J. Math. Anal.*, Vol. 111, pp. 622-636, 1985.

[Pol.1] E. Polak, "A Modified Nyquist Stability Test for Use in Computer Aided Design," *IEEE Trans. Automat. Contr.*, Vol. AC-29, No.1, pp.91-93, 1984.

[Pol.2] E. Polak and T. L. Wuu, "On the Design of Stabilizing Compensators via Semi-Infinite Optimization", *IEEE Trans. Automat. Contr.*, Vol. 34, No. 2, pp.196-200, 1989.

[Pol.3] E. Polak, "On the Mathematical Foundations of Nondifferentiable Optimization in Engineering Design," *SIAM review*, pp. 21-91, March 1987.

[Pol.4] E. Polak and E. J. Wiest, "A Variable Metric Technique for the Solution of Affinely Parametrized Nondifferentiable Optimal Design Problems," *University of California, Berkeley, Electronics Research Laboratory* Memo No. UCB/ERL M88/42, 10 June 1988. Also *JOTA*, in Press.

[Pol.5] E. Polak and S. E. Salcudean, "On the Design of Linear Multivariable Feedback Systems via Constrained Nondifferentiable Optimization in H^∞ Spaces,"*IEEE Trans. Automat. Contr.*, Vol. 34, No. 3, pp. 268-276, March 1989.

[Pol.6] E. Polak, D. Q. Mayne and D. M. Stimler, "Control System Design via Semi-Infinite Optimization," *Proceedings of the IEEE*, pp. 1777-1795, December 1984.

[Pri.1] A. J. Pritchard and D. Salamon, "The Linear Quadratic Control Problem for Infinite Dimensional Systems with Unbounded Input and Output Operators," *SIAM J. Control and Optimization*, Vol. 25, pp. 121-144, 1987.

[Rud.1] W. Rudin, *Real and Complex Analysis*, 2nd edition, McGraw-Hill, 1984.

[Rud.2] W. Rudin, *Functional Analysis*, McGraw-Hill, 1973.

[Sac.1] J. L. Sackman and I. Kaya, "On the Propagation of Transient Pulses in Linearly Viscoelastic Media," *Journal of the Mechanics and Physics of Solids*, Vol.16, No. 5, Sept. 1968, pp. 349-356.

[Sac.2] J. L. Sackman, "Prediction and Identification in Viscoelastic Wave Propagation," in *Wave Propagation in Viscoelastic Media*, Research Notes in Mathematics, No. 52, Pitman, 1982, pp. 218-234.

[Sch.1] J. M. Schumacher, "A Direct Approach to Compensator Design for Distributed Parameter Systems," *SIAM J. Control and Optimization*, Vol. 21, pp. 823-836, 1983.

[Sch.2] R. A. Schulz, "Control of a Large Space Structure Using a Distributed Parameter Model," Ph.D. Thesis, UCLA, 1986.

[Tau.1] J. Taufer, "On Factorization Method," *Aplikace Matematiky*, 11, 1966, pp. 427-450.

[Tri.1] R. Triggiani, "On the Stabilizability Problem in Banach Space," *Journal of Mathematical Analysis and Applications*, 52, pp. 383-403, 1975.

[Vid.1] M. Vidyasagar, *Control Systems Synthesis: A Factorization Approach*, Cambridge, MA: M.I.T. Press, 1985.

[Wuu.1] T. L. Wuu, "DELIGHT.MIMO: An Interactive System for Optimization-Based Multivariable Control System Design," *Ph.D. Dissertation*, Department of Electrical Engineering and Computer Sciences, University of California, Berkeley, 1986.

[Zab.1] J. Zabczyk, "Remarks on the Algebraic Riccati Equation in Hilbert Space," *Appl. Math. Opt.*, Vol. 2, pp. 251-258, 1976.

[Zab.2] J. Zabczyk, "A Note on C_0-Semigroups", *Bulletin de L'academie polonaise des sciences, serie math., astr. et phys.*, Vol. 23, pp. 895-898, 1975.