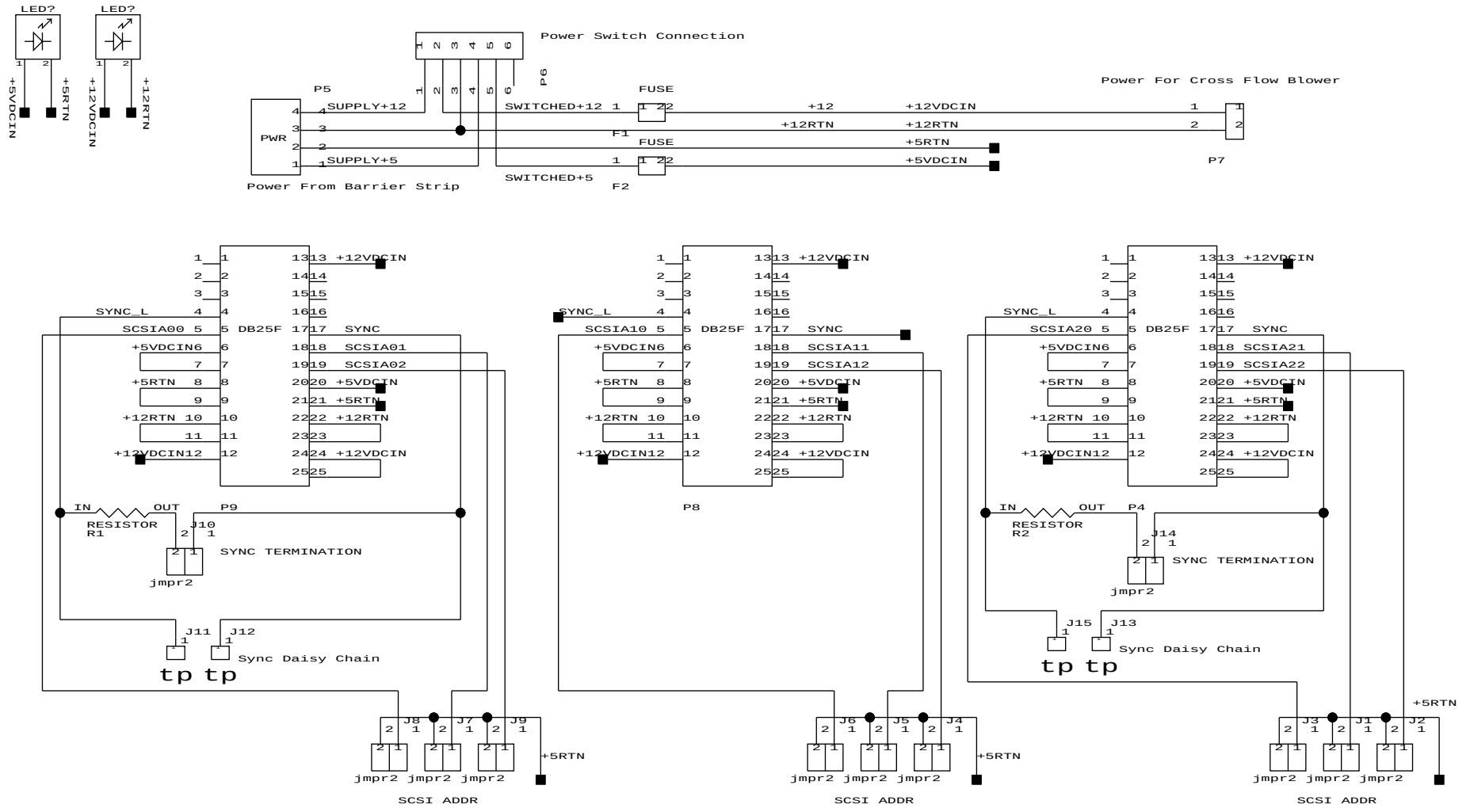


# SCSI STRING POWER AND ADDRESS

Revised 12/2/91 by pfile